Network | Dome

ANE-L7012L

4MP White light Flateye Camera

Key Features

- 4 megapixel (2560 x 1440) resolution
- Color : 0.05Lux (F1.2, 1/30sec)
- Built-in 3mm fixed lens
- White light viewable length 20m
- Light alarm support
- 30fps@ all resolutions (H.265/H.264)
- H.265/H.264, MJPEG codec supported, Multiple streaming
- WDR (120dB)
- Defocus detection, Directional detection, Motion detection, Enter/Exit, Tampering
- Micro SD/SDHC memory slot (Max. 128GB), PoE
- Hallway view, LDC, WiseStream II support
- IP67, IK10 support

Design and specifications are subject to change without notice. The latest product information / specification can be found at HanwhaVision.com.
Hanwha Vision is formerly known as Hanwha Techwin.

© Hanwha Vision CO., LTD. All rights reserved.

ANE-L7012L

4MP White light Flateye Camera

Specifications

Video	
Imaging Device	1/2.8" CMOS
Resolution	2560x1440, 1920x1080, 1280x960, 1280x720, 800x600, 800x448, 720x576, 720x480, 640x480, 640x360, 320x240
Max. Framerate	H.265/H.264: Max. 30fps/25fps(60Hz/50Hz) MJPEG: Max. 15fps(@4MP Max. 2fps)
Min. Illumination	Color : 0.05Lux (F1.2, 1/30sec)

Lens	
Focal Length (Zoom Ratio)	3.0mm fixed focal
Max. Aperture Ratio	F1.2
Angular Field of View	H: 97° / V: 53° / D: 113°
Min. Object Distance	2.0m(6.56ft)
Focus Control	Fixed

Pan / Tilt / Rotate	
Pan / Tilt / Rotate Range	0°~350° / 0°~75° / 0°~360°

Operational	
Camera Title	Displayed up to 85 characters
Day & Night	Auto(ICR)
Backlight Compensation	BLC, WDR, SSDR
Wide Dynamic Range	120dB
Digital Noise Reduction	SSNR
Motion Detection	4ea, polygonal zones
Privacy Masking	6ea, rectangular zones
Gain Control	Low / Middle / High
White Balance	ATW / AWC / Manual / Indoor / Outdoor
LDC	Support
Electronic Shutter Speed	Minimum/Maximum/Anti flicker (1/5~1/12,000sec)
Video Rotation	Flip, Mirror, Hallway view(90°/270°)
Analytics	Motion detection, Tampering, Defocus detection , Virtual area(Intrusion/Enter/Exit), Virtual line(Crossing/Direction)
Alarm Triggers	Analytics, Network disconnect
Alarm Events	When alarm trigger occurred - File upload(image) : e-mail/FTP - Notification : e-mail - Recording : SD/SDHC/SDXC or NAS recording at event triggers - Handover(PTZ preset) - Light alarm
Light Type	Warm color (3000K)

Design and specifications are subject to change without notice. The latest product information / specification can be found at HanwhaVision.com.
Hanwha Vision is formerly known as Hanwha Techwin.

© Hanwha Vision CO., LTD. All rights reserved.

Light Viewable Length	20m(65.61ft)

Network	
Ethernet	RJ-45 (10/100BASE-T)
Video Compression	H.265/H.264 : Main/High, MJPEG
Smart Codec	Manual (5ea area), WiseStream II
Video Quality Adjustment	H.264/H.265: Target bitrate level control MJPEG: Quality level control
Bitrate Control	H.264/H.265: CBR or VBR MJPEG: VBR
Streaming	Unicast(6 users) / Multicast Multiple streaming(Up to 3 profiles)
Protocol	IPv4, IPv6, TCP/IP, UDP/IP, RTP(UDP), RTP(TCP), RTCP, RTSP, NTP, HTTP, HTTPS, SSL/TLS, DHCP, PPPoE, FTP, SMTP, ICMP, IGMP, SNMPv1/v2c/v3(MIB-2), ARP, DNS, DDNS, QoS, PIM-SM, UPnP, Bonjour, LLDP
Application Programming Interface	ONVIF Profile S/G/T, SUNAPI (HTTP API)

Security	
OS / Firmware Protect	Firmware encryption
User authentication	Digest Authentication, Prevent brute-force attack
Network authentication	802.1X Authentication(EAP-TLS, EAP-LEAP, EAP-PEAP MSCHAPv2)
Secure Communication	HTTPS, SRTP, WSS(Websocket secure)
Access Control	Access control based on IP address
Data Protect	Authentication information encryption, ZIP compression encryption
Audit	User Access/System/Event log management
Device ID	Device Certificate(Hanwha Private Root CA)
Secure Storage	SDcard partition encrypt

General	
Webpage Language	English, Korean, Chinese, French, Italian, Spanish, German, Japanese, Russian, Portuguese, Czech, Polish, Turkish, Dutch, Hungarian, Greek
Edge Storage	Micro SD/SDHC/SDXC 1slot 128GB
Memory	512MB RAM, 256MB Flash

Environmental & Electrical	
Operating Temperature / Humidity	-30°C~+55°C(-22°F ~ +131°F) / 0~95% RH * Start up should be done at above -20°C(-4°F)
Storage Temperature / Humidity	-30°C~+55°C(-22°F ~ +131°F) / 0~95% RH
Certification	IP66, IP67, IK10
Input Voltage	PoE(IEEE802.3af, Class3)
Power Consumption	Max: 7.6W, Typ: 4.2W

Mechanical	
Color / Material	White / Plastic, Aluminum
RAL Code	RAL9003
Product Dimensions / Weight	ø125.0x87.4mm(ø4.92x3.44"), 620g
Compatible Conduit hole / Gangbox	None / Single, Double, 4" Octagon

Certifications & Standards

Design and specifications are subject to change without notice. The latest product information / specification can be found at HanwhaVision.com.
Hanwha Vision is formerly known as Hanwha Techwin.

© Hanwha Vision CO., LTD. All rights reserved.

EMC	FCC 47 CFR 15 Subpart B Class A ICES-3(A)/NMB-3(A) CE/UKCA - EN 55032 Class A, EN 50130-4, EN 61000-3-2, EN 61000-3-3 RCM AS/NZS CISPR 32 Class A
Safety	UL 62368-1, CAN/CSA C22.2 NO. 62368-1 IEC/EN 62471
Environment	IEC/EN 63000 IEC/EN 60529 IP66/IP67, IEC/EN 62262 IK10

Compatible Models	
Hanging Adaptor	SBP-125HMW
Back Box	SBV-125BW

DORI (EN62676-4 standard)	
Detect (25PPM/ 8PPF)	45.3m(148.62ft)
Observe (63PPM/ 19PPF)	18.1m(59.45ft)
Recognize (125PPM/ 38PPF)	9.1m(29.72ft)
Identify (250PPM/ 76PPF)	4.5m(14.86ft)

Design and specifications are subject to change without notice. The latest product information / specification can be found at HanwhaVision.com.
Hanwha Vision is formerly known as Hanwha Techwin.

© Hanwha Vision CO., LTD. All rights reserved.

ANE-L7012L

4MP White light Flateye Camera

CAD

Unit:mm [inch]

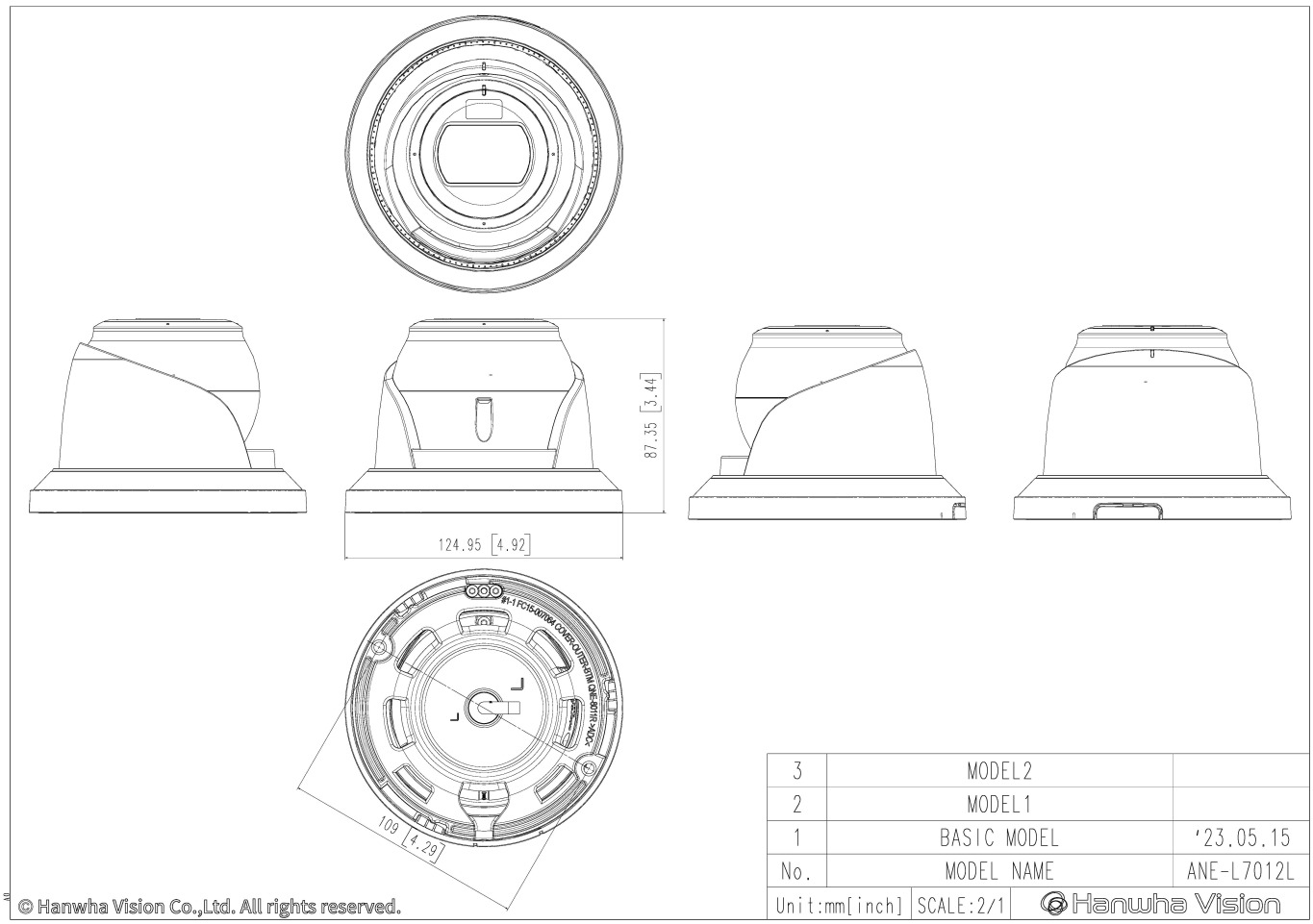

Design and specifications are subject to change without notice. The latest product information / specification can be found at HanwhaVision.com.
Hanwha Vision is formerly known as Hanwha Techwin.

© Hanwha Vision CO., LTD. All rights reserved.