Hanwha Vision

Network Fisheye

XNF-8010RVM

6MP H.265 Fisheye Camera

Key Features

- Max. 2048 x 2048 resolution
- H.265, H.264, MJPEG codec supported
- Fisheye, Single panorama, Double panorama, Quad view
- On board dewarping, Digital PTZ (8x), Bi-directional audio
- True WDR (120dB), WiseStream II support
- Video Analytics, Heatmap, People counting
- Queue management
- Motion deteciton, Handover, M12 (8010RVM), IP66/IK10
- Memory slot(Max. 512GB), IR viewable length 15m(49.21ft)

Compatible Accessories (Optional)

SBP-300CM

SBP-300PM

SBP-300KM

SBP-300WM1

SBP-300HM5

SBP-300LM

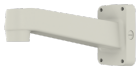

SBP-390WM2

SBP-300WM

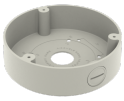

SBF-100B1

SBP-300B

SHD-1600FPW

SBP-300NB

SBP-300TM1

Design and specifications are subject to change without notice. The latest product information / specification can be found at HanwhaVision.com
Hanwha Vision is formerly known as Hanwha Techwin.

© Hanwha Vision CO., LTD. All rights reserved.

XNF-8010RVM

6MP H.265 Fisheye Camera

Specifications

Video	
Imaging Device	1/1.8" 6M CMOS
Resolution	Original view: 2048x2048, 1280x1280, 1080x1080, 960x960, 768x768, 720x720, 640x640, 480x480 Single panorama: 2048x512, 1920x480, 1280x320, 640x160, 704x176 Double panorama: 2048x1024, 1920x960, 1280x640, 640x320, 704x352 Quad view: 2048x1536, 1600x1200, 1280x960, 1024x768, 800x600, 640x480, 704x576 Q1/2/3/4: 1024x768, 800x600, 640x480
Max. Framerate	H.264/H.265 : 30fps/25fps@2048x2048(60Hz/50Hz) MJPEG : Max 15fps
Min. Illumination	Color: 0.1 Lux (F1.6, 1/30sec), BW: 0 Lux (IR LED On)
Video Out	CVBS: 1.0 Vp-p / 75Ω composite, 714x480(N), 702x576(P) for Installation USB: Micro USB Type B, for installation

Lens	
Focal Length (Zoom Ratio)	1.6mm fixed focal
Max. Aperture Ratio	F1.6
Angular Field of View	H: 192- / V: 192- / D: 192-
Min. Object Distance	0.3m
Focus Control	Simple remote control focus via network

Operational	
Camera Title	Displayed up to 85 characters
Day & Night	Auto(ICR)
Backlight Compensation	BLC, HLC, WDR, SSDR
Wide Dynamic Range	120dB
Digital Noise Reduction	SSNR V
Defog	Support
Motion Detection	8ea, 8point polygonal zones
Privacy Masking	32ea, Quadrangle zones - Color: Grey/Green/Red/Blue/Black/White - Mosaic
Gain Control	Low / Middle / High
White Balance	ATW / AWC / Manual / Indoor / Outdoor
Electronic Shutter Speed	Minimum / Maximum / Anti flicker (2~1/12,000sec)
Video Rotation	Flip, Mirror
Analytics	Directional detection, Motion detection, Appear/Disappear, Enter/Exit, Loitering, Tampering, Virtual line, Audio detection, Sound classification
Business Intelligence	People counting, Queue management, Heatmap
Alarm I/O	Input 1ea / Output 1ea
Alarm Triggers	Analytics, Network disconnect, Alarm input

Design and specifications are subject to change without notice. The latest product information / specification can be found at HanwhaVision.com
Hanwha Vision is formerly known as Hanwha Techwin.

© Hanwha Vision CO., LTD. All rights reserved.

Alarm Events	File upload via FTP and e-mail Notification via e-mail SD/SDHC/SDXC or NAS recording at event triggers Alarm output
Audio In	Selectable(mic in/line in/built-in mic) Supply voltage: 2.5VDC(4mA), Input impedance: 2K Ohm
Audio Out	Line out, Max.output level: 1Vrms
IR Viewable Length	15m(49.21ft)

Radiometry	
Temperature Accuracy	G.711 u-law /G.726 Selectable G.726(ADPCM) 8KHz, G.711 8KHz G.726: 16Kbps, 24Kbps, 32Kbps, 40Kbps AAC-LC: 48Kbps at 16KHz

Network	
Ethernet	M12
Video Compression	H.265/H.264: Main/Baseline/High, MJPEG
Audio Compression	G.711 u-law /G.726 Selectable G.726(ADPCM) 8KHz, G.711 8KHz G.726: 16Kbps, 24Kbps, 32Kbps, 40Kbps AAC-LC: 48Kbps at 16KHz
Smart Codec	Manual(5ea area), WiseStream II
Bitrate Control	H.264/H.265: CBR or VBR MJPEG: VBR
Streaming	Multiple streaming(Up to 10 profiles)
Protocol	IPv4, IPv6, TCP/IP, UDP/IP, RTP(UDP), RTP(TCP), RTCP, RTSP, NTP, HTTP, HTTPS, SSL/TLS, DHCP, PPPoE, FTP, SMTP, ICMP, IGMP, SNMPv1/v2c/v3(MIB-2), ARP, DNS, DDNS, QoS, PIM-SM, UPnP, Bonjour, SRTP(Unicast)
Security	HTTPS(SSL) Login Authentication Digest Login Authentication IP Address Filtering User access log 802.1X Authentication(EAP-TLS, EAP-LEAP)
Application Programming Interface	ONVIF Profile S/G/T SUNAPI(HTTP API) Wisenet open platform

General	
Webpage Language	English, French, German, Spanish, Italian, Chinese, Korean, Russian, Japanese, Swedish, Portuguese, Czech, Polish, Turkish, Dutch, Hungarian, Greek
Edge Storage	Micro SD/SDHC/SDXC 2slot 512GB
Memory	1024MB RAM, 256MB Flash

Environmental & Electrical	
Operating Temperature / Humidity	-40°C ~ +55°C (-40°F ~ +131°F) / Less than 90% RH
Storage Temperature / Humidity	-50°C ~ +60°C(-58°F ~ +140°F) / Less than 90% RH
Certification	IP66, IK10 EN55011:2009+A1:2010, EN50581:2012,EN50121-3-2:2015, EN61000-4-2:2009, EN61000-4-3:2006+A2:2010, EN61000-4-4:2012, EN61000-4-5:2014 EN61000-4-6:2009, EN50155:2007
Input Voltage	PoE(IEEE802.3af, Class3), 12VDC
Power Consumption	PoE: Max 12.95W 12VDC: Max 12W

Mechanical	
Color / Material	Ivory / Aluminum
Product Dimensions / Weight	Ø146x65.8mm(Ø5.75x2.59"), 790g(1.74 lb)

Design and specifications are subject to change without notice. The latest product information / specification can be found at HanwhaVision.com
Hanwha Vision is formerly known as Hanwha Techwin.

© Hanwha Vision CO., LTD. All rights reserved.

XNF-8010RVM

6MP H.265 Fisheye Camera

CAD

Unit:mm [inch]

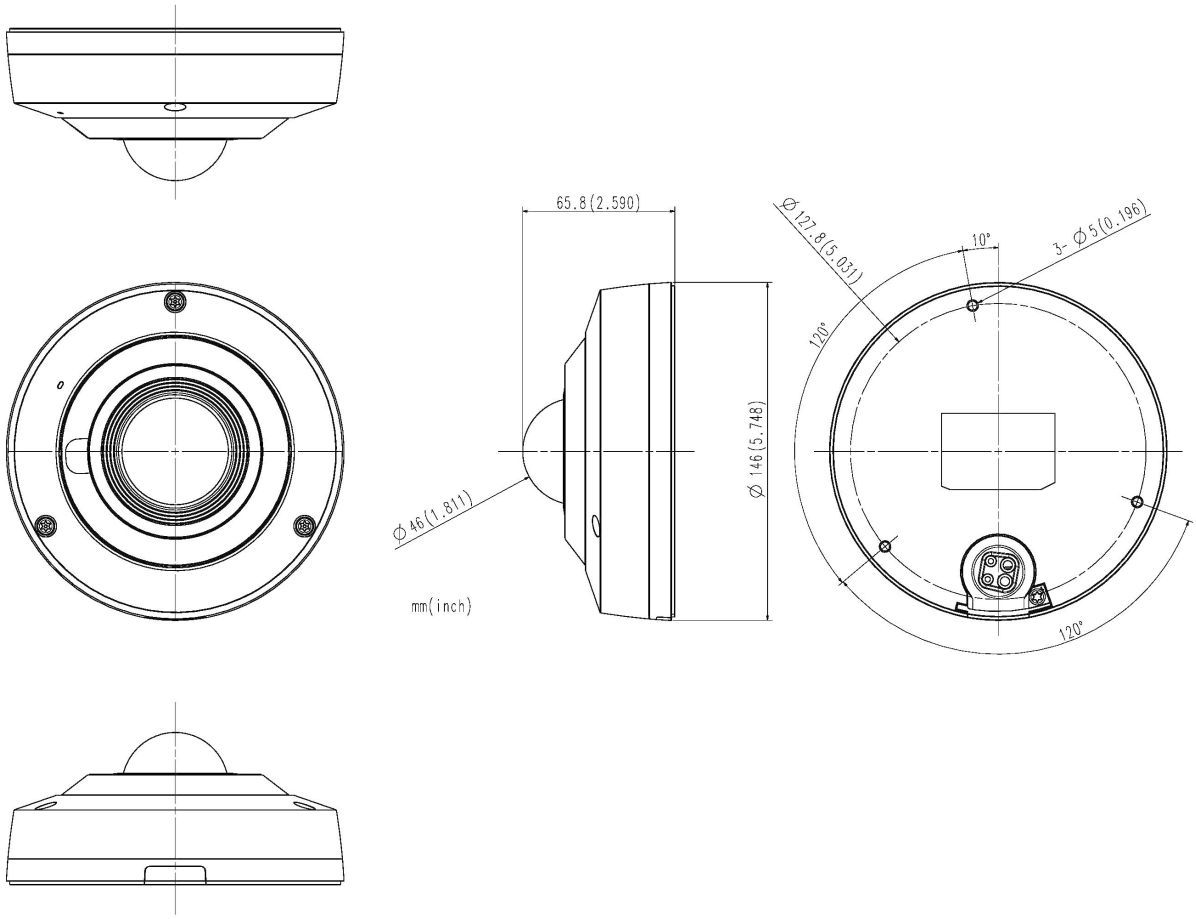

Design and specifications are subject to change without notice. The latest product information / specification can be found at HanwhaVision.com
Hanwha Vision is formerly known as Hanwha Techwin.

© Hanwha Vision CO., LTD. All rights reserved.