PRODUCT SPEC SHEET

24vDC Transformer Rectifier Boxed PSU

This Ultra Tech range of 1, 2 and 4 amp boxed 24vDC power supplies are designed to work with door retainers. High efficiency, cost effective power supply.

FEATURES

Mains input voltage: 170-264vAC.
Output voltage: 24vDC
Short circuit and overload protection
Lid tamper
Mains LED - Green
Fault LED - Red
Selectable NO / NC input for Relay
External 24vDC voltage input for Relay

WBXPSU2A24VDST

SKU PART #	**WBXPSU2A12VDST**
UPC	**840049306486**
LENGTH	**200mm**
WIDTH	**240mm**
DEPTH	**75mm**
WEIGHT	**2.03kg**

For more information contact your ADI salesperson or visit us at www.adiglobal.com

24vDC Transformer Rectifier Boxed PSU
1, 2 and 4 amp versions available

PART SKU # WBXPSU1A24VDST / WBXPSU2A24VDST / WBXPSU424VDST

Normal Operation:

The green LED indicates Mains present.

The red fault LED indicates that the output fuse has blown or the output is off due to the contact switching at terminals SW or 24V EXT(see diagram).

The red LED under the output fuse indicates that the output is on. Lid Tamper: contact close when lid closed.(N/O volt-free contact)

Fault Diagnosis(No DC output):

Ensure SW & 24V EXT settings are correct for the application(refer to diagram)
Output fuse blown.
Note: Some equipment can draw more current on power up which is in excess of manufacturers current rating (Electro-magnetic locks can cause issues.)
Fuse must be Quick Blow at power supplying rating.

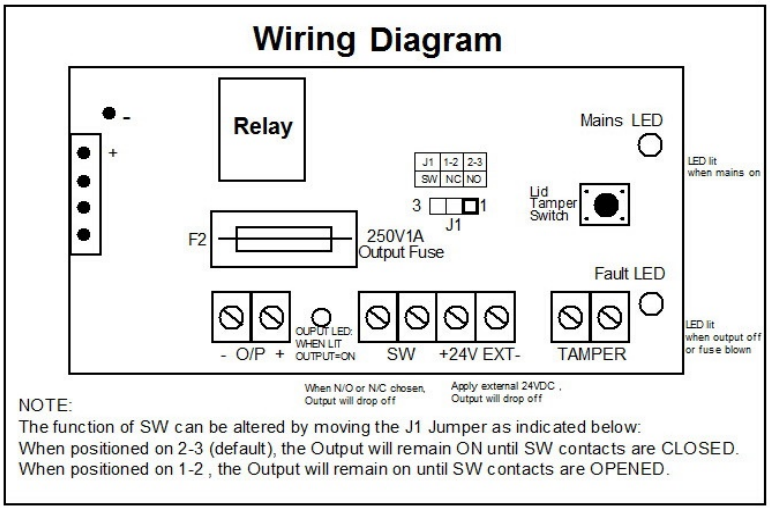

Installation

Connect the load and all associated wiring.
The DC24V terminal are marked – DC-OUT +. The cable size for the load should be rated to carry the load current for all devices connected to this. If required, connect an external switch to the terminals marked SW. Subject to the settings (see diagram): Opening or Closing the switch will turn on or off output.
If required, connect an external supply to 24 EXT terminals (see diagram).Pay attention to the correct polarity. Applying 24vDC to these terminals will turn off the output
Mains and low voltage cables should be routed through separate knock-out holes. Refit the mains fuse
Confirm GREEN mains LED is lit. Confirm RED output is lit.
Ensure voltage across DC-OUT terminals: 24-27vDC

Ensure GREEN/YELLOW earth lead is connected to lid earth tab. Close the lid and secure the box with screws supplied.

24vDC Transformer Rectifier Boxed PSU
1, 2 and 4 amp versions available

PART SKU # WBXPSU1A24VDST / WBXPSU2A24VDST / WBXPSU424VDST

Input Specification:
Input Voltage: 170-264vAC, 47-63Hz
Mains Input Fuse: 3.0A 250v
Output Specification:
Output Voltage: 24vDC 1A or 2A or 4A (Subject to the model)
Ripple: 150mV pk-pk max.
Load Output Fuse: 1A or 2A or 4A (Subject to the model)
Overload Protection: Electronics shutdown until overload or short circuit removed.
Box Size: 200Wx240Hx75D mm removable hinge
Warranty: 3 Years

Environmental:
Working Temperature: -10°c~+40°c Storage Temperature -20°c ~+60°c
Humidity: 95% RH non-condensing

Terminals:

DC-OUT x 2 +/- voltage O/P to load equipment
SW x 2 24V Switch for controlling Output ON/OFF
EXT x 2 +/- external voltage for controlling Output ON/OFF
Tamper x 2 Tamper volt-free contact