3034

FIRE MODULE 10 PAIRS, Tamper contact

Technical data

Cable dimension - screw terminals	0,2 - 2,5 mm2
Input max. load	60 V / 2 A
Tamper switch max. load	50 mA
Anti-tamper protection	Yes
Dimensions (L x W)	116 x 40

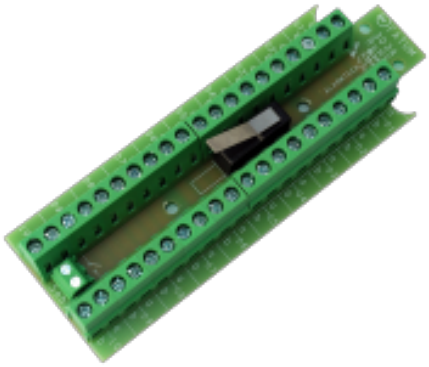

Terminal block for installation of alarm, access and fire systems.

Anti-tampering protected terminal module with 10 pairs.

The terminal block has 21 parallel connected terminals and additional 1 pair intended for anti-tamper switch. Up to 2.5 mm2 screw connection with lift function for, for example, coarse fire cables.

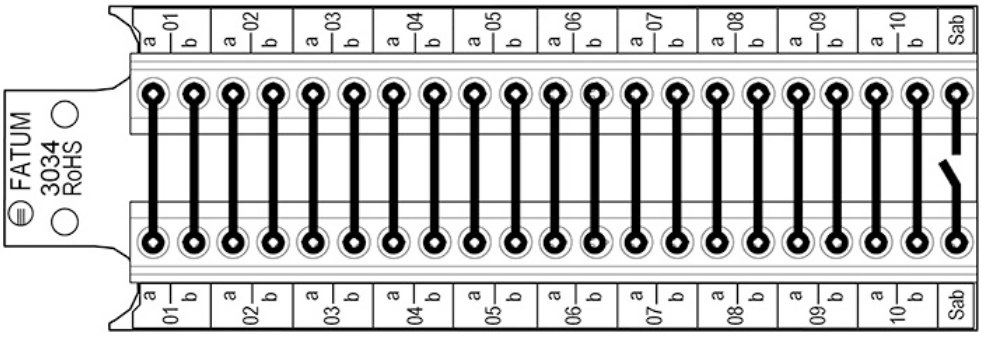

ORDERING INFORMATION

Model	Description
3034.03	Fire module, 21 Pairs, Tamper protected, Screw

Related products and accessories

	4101 MODULE BOX PLASTIC WITH PLACE FOR 1 TERMINAL BLOCK	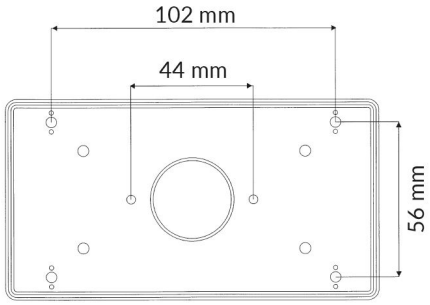
	4103 MODULE BOX PLASTIC WITH PLACE FOR UP TO 3 TERMINAL BLOCKS	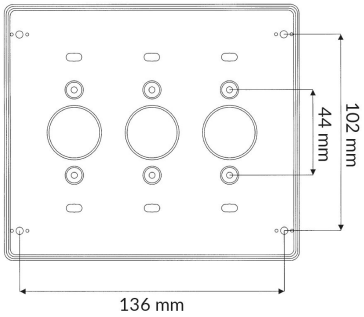
	4101R REDLINE MODUL E BOX, PLASTIC	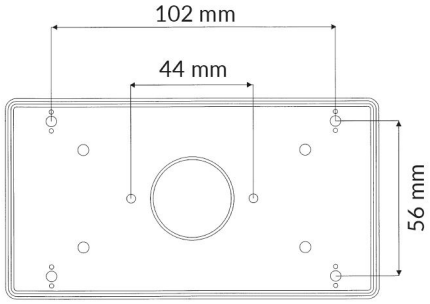
	4103R REDLINE MODUL E BOX, PLASTIC IN RED WITH PLACE FOR UP TO 3 TERMINAL BLOCKS	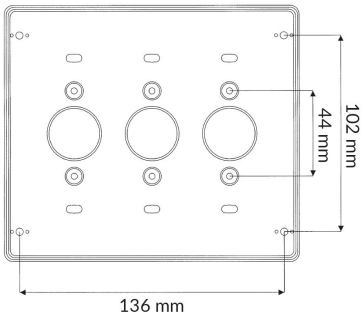
	2591.15 TERMINAL SPACERS FOR MOUNTING OF OUR TERMINAL BLOCKS	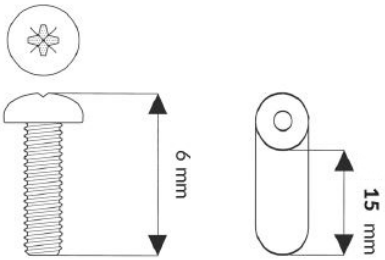

Related products and accessories

	2591.18 TERMINAL SPACERS FOR MOUNTING OF OUR TERMINAL BLOCKS	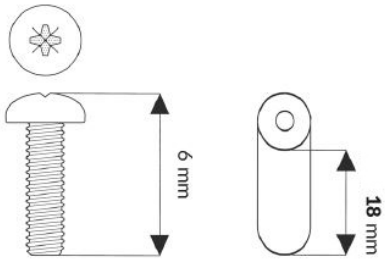
	2596.04 TERMINAL SPACERS AS A COMPLEMENT TO ESMI- AND ERICSSON-BAR	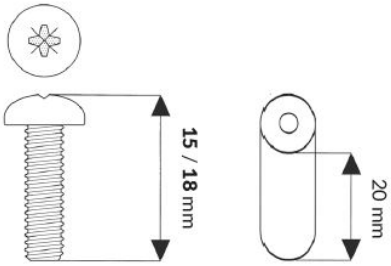
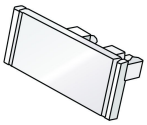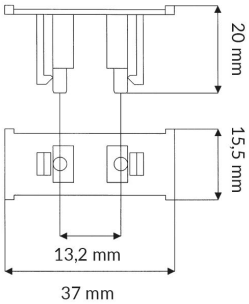	**3131.01** LABEL TERMINAL FOR EASY LABELING OF MODULE BLOCKS