3022

ALARM MODULE 10 PAIRS

Technical data

Cable dimension - LSA slots (mm)	Ø 0,4 - 0,7
Cable dimension - screw terminals	0,14 - 1 mm2
Input max. load	60 V / 2 A
Tamper switch max. load	50 mA
Anti-tamper protection	Yes

Terminal block for installation of alarm and access systems.

Anti-tampering protected terminal module with 10 pairs.

The terminal block has 10 parallel connected terminals, as well as 4 separate connections, of which 2 connections are intended for anti-tamper switch connection and 2 for cable shield.

Available in different options, slot (LSA) or screw connection with lift function.

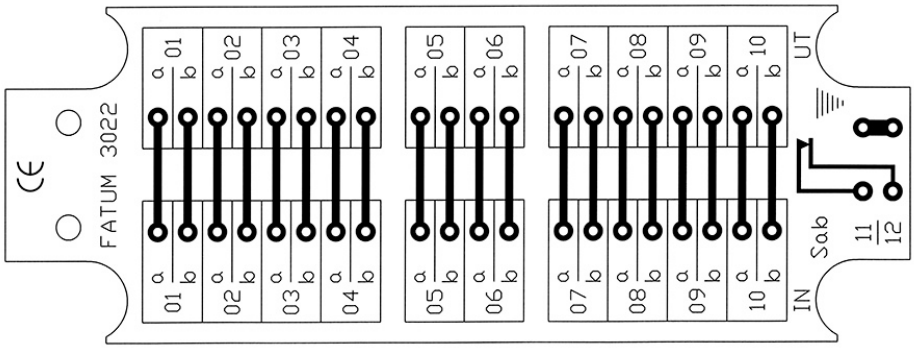

ORDERING INFORMATION

Model	Description
3022.01	Alarm module, 10 Pairs, Tamper protected, LSA / LSA
3022.02	Alarm module, 10 Pairs, Tamper protected, LSA / Screw
3022.03	Alarm module, 10 Pairs, Tamper protected, Screw / Screw

Related products and accessories

	4101 MODULE BOX PLASTIC WITH PLACE FOR 1 TERMINAL BLOCK	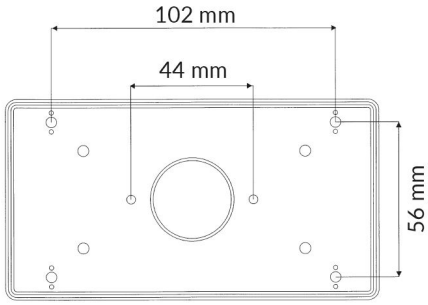
	4103 MODULE BOX PLASTIC WITH PLACE FOR UP TO 3 TERMINAL BLOCKS	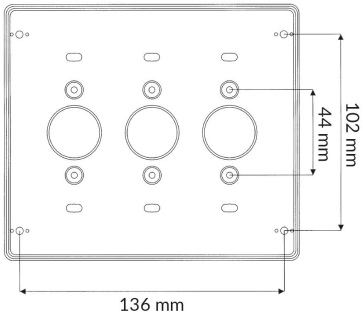
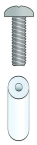	**2591.15** TERMINAL SPACERS FOR MOUNTING OF OUR TERMINAL BLOCKS	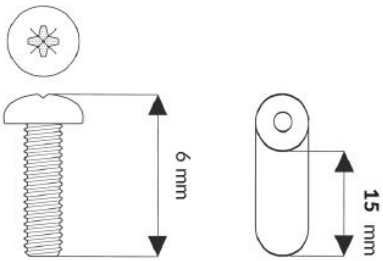
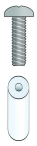	**2591.18** TERMINAL SPACERS FOR MOUNTING OF OUR TERMINAL BLOCKS	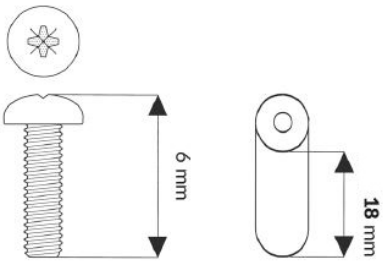
	2596.04 TERMINAL SPACERS AS A COMPLEMENT TO ESMI- AND ERICSSON-BAR	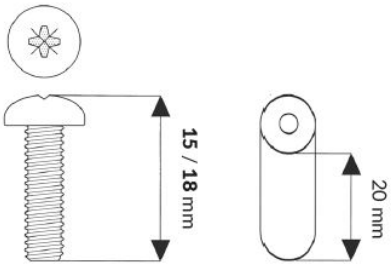

Related products and accessories

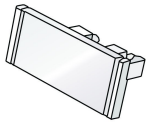	**3131.01** LABEL TERMINAL FOR EASY LABELING OF MODULE BLOCKS	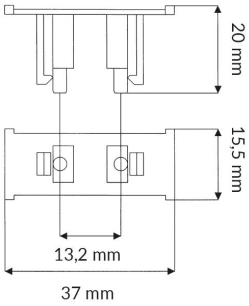
	0501.01 LSA TOOL FOR KRONE LSA PLUS CONTACTS	
	1901.12 SPARE SPRINGS TO FATUM-SERIES	