EN

TECHNICAL
MANUAL

Handsfree entry phone
Mini Art. 6750W, 6751W

Comelit®
Passion.Technology.Design.

Warning

Intended use

This Comelit product has been designed and manufactured for use in the creation of audio and video communication systems in residential, commercial, industrial and public buildings.

Installation

All activities connected to the installation of Comelit products must be carried out by qualified technical personnel, with careful observation of the indications provided in the Manuals / Instruction sheets supplied with those products.

Wires

Disconnect the power supply before carrying out any operations on the wiring.

Use wires with a cross-section suited to the distances involved, observing the instructions provided in the system manual.

We advise against running the system wires through the same duct as power cables (230V or higher).

Safe usage

To ensure Comelit products are used safely:

- carefully observe the indications provided in the Manuals / Instruction sheets,
- make sure the system created using Comelit products has not been tampered with / damaged.

Service

Comelit products do not require maintenance aside from routine cleaning, which should be carried out in accordance with the indications provided in the Manuals / Instruction sheets.

Any repairs must be carried out:

- for the products themselves, exclusively by **Comelit Group S.p.A.**,
- for the systems, by qualified technical personnel.

Disclaimer

Comelit Group S.p.A. does not assume any responsibility for

- any purpose other than the intended use,
- failure to observe the indications and warnings contained in this Manual / Instruction sheet.

Comelit Group S.p.A. reserves the right to change the information provided in this Manual / Instruction Sheet at any time and without prior notice.

Table of contents

Warning 2

Description 3
- **Art. 6750W** 3
- **Art. 6751W** 4

Legend: buttons and indicator LEDs 5
- **Pressing and holding keys** (Disabled by default from firmware version 1.2.0) 5
- **Automatic lock-release on receipt of call (Doctor mode)** 5
- **Automatic Answer (Hands-Free mode)** 5

Technical specifications 6

Surface mounting 7

Connections 9
- **Connection to the video entry riser and the floor door call button** 9
- **Branched connection to the video entry system riser from the door entry monitor** 9
- **Connection to the door entry riser and the floor door call button** 9

Button configuration 10
- **Basic configuration** 10
  - Legend 10
- **Advanced configuration** 11
  - Intercom call 11
    - Introduction 11
    - **General** intercom call: button programming 11
    - Intercom call to **selective** address: button programming 11
    - Selective intercom address 12
    - Assigning a selective address 12
    - Deleting the selective address of the door-entry phone 12
  - Generic actuator, coded actuator 12
    - **Generic** actuator: button programming 12
    - **Coded** actuator: button programming 13
  - Other functions: button programming 13
  - Programming range 14
  - Changing the ringtone 15
  - Programming reset 15

Addressing table 16

System performance and layouts 16

Description

Art. 6750W

Mini series hands-free door entry phone with full-duplex audio and integrated magnetic induction amplification system. Allows speaker volume adjustment and call volume adjustment, with ringtones which can be customised by choosing one of several different melodies. Equipped with 5 sensitive touch buttons for audio control, lock-release, actuator, switchboard call and privacy function, as well as door status indicator LEDs. Manages floor door calls as standard. Complete with 2 x 8-position dip-switches for programming the user code and button programming. Surface-mounted installation. The door-entry phone can be used in ***Simplebus2 2-wire audio/video*** *systems with mixer art. 4888C, Simplebus2 with power supply unit art.1210/1210A or kits which use power supply unit art. 1209. Complete with distribution terminal art. 1214/2C. Dimensions 105x105x20 mm.*

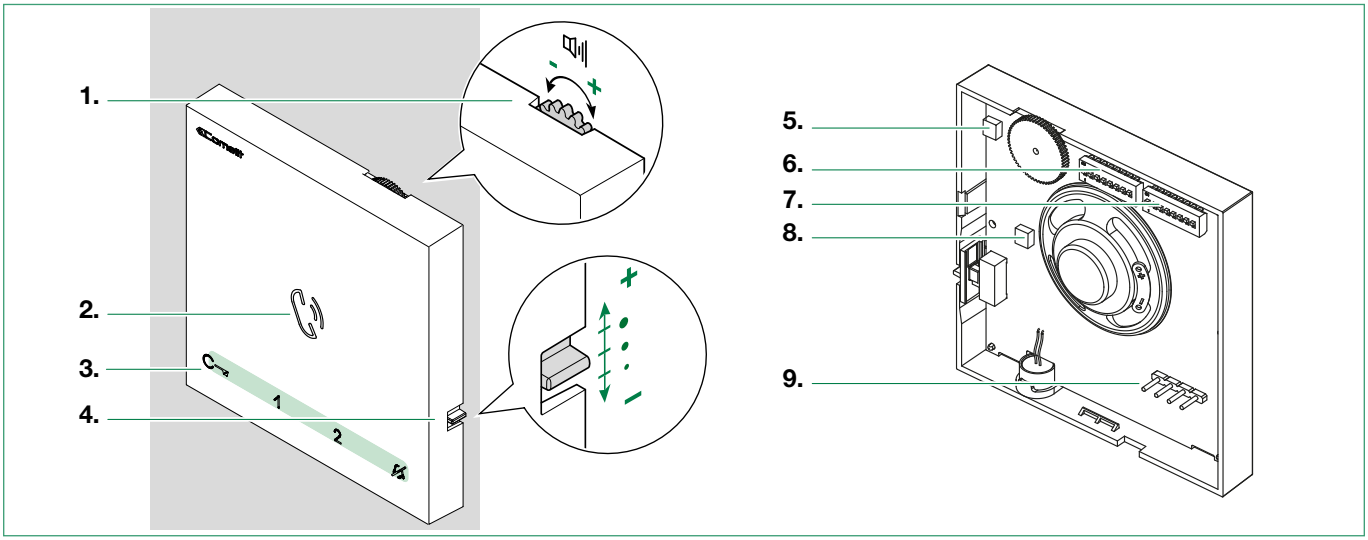

1. Loudspeaker volume control
   - *turn clockwise to increase the value*
2. Speaker and audio activation button
3. Touch-sensitive buttons
4. Call volume adjustment (high - medium - low)
5. Trimmer - Factory setting DO NOT CHANGE!
6. S1 Ⓐ Microswitches for setting the user code (see **addressing table**)
7. S2Ⓟ Microswitches for programming keys and functions

   DIP 1-2-3-4 for programming button functions

   DIP 5-6 for programming access

   DIP 7-8 not used
8. Trimmer - Factory setting DO NOT CHANGE!
9. Pin for securing terminal block

Terminal block for system connection

LL Bus line connection terminals

CFP1 CFP2 Floor door call input

Art. 6751W

Mini series hands-free door-entry phone with full-duplex audio. Allows speaker volume adjustment and call volume adjustment, with ringtones which can be customised by choosing one of several different melodies. Equipped with 5 sensitive touch buttons for audio control, lock-release, actuator, switchboard call and privacy function, as well as door status indicator LEDs. Manages floor door calls as standard. Complete with 2 x 8-position dip-switches for programming the user code and button programming. Surface-mounted installation. The door-entry phone can be used in ***Simplebus2 audio systems*** *with power supply unit art. 1210/1210A. Dimensions 105x105x20 mm.*

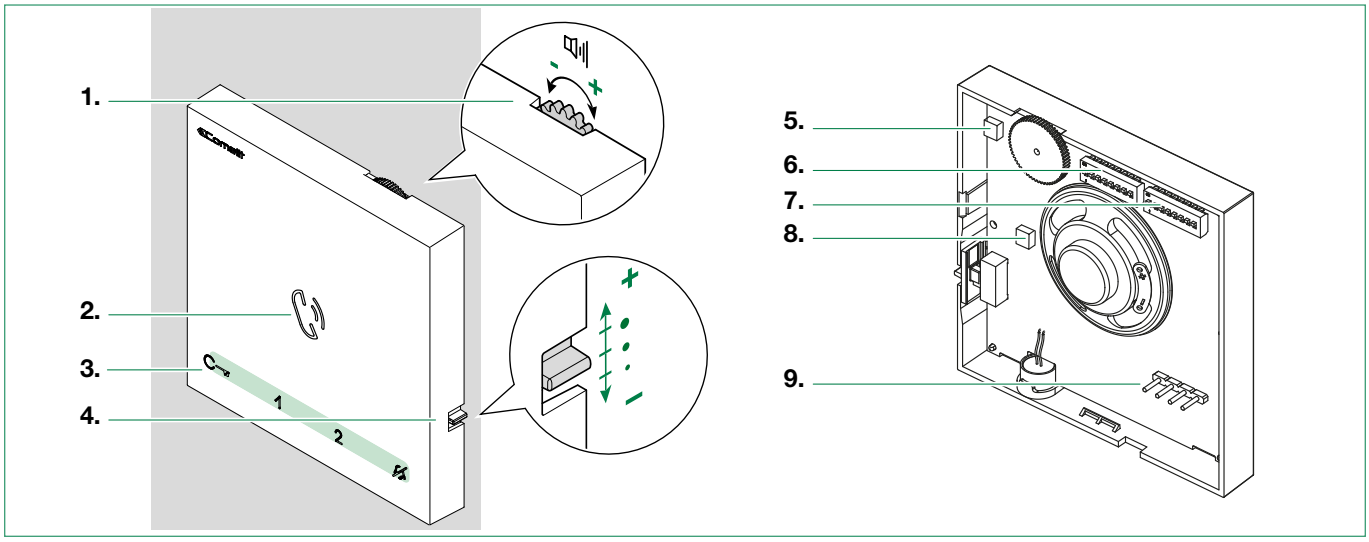

1. Loudspeaker volume control
   - *turn clockwise to increase the value*
2. Speaker and audio activation button
3. Touch-sensitive buttons
4. Call volume adjustment (high - medium - low)
5. Trimmer - Factory setting DO NOT CHANGE!
6. S1 Ⓐ Microswitches for setting the user code (see **addressing table**)
7. S2Ⓟ Microswitches for programming keys and functions

   DIP 1-2-3-4 for programming button functions

   DIP 5-6 for programming access

   DIP 7-8 not used
8. Trimmer - Factory setting DO NOT CHANGE!
9. Pin for securing terminal block

Terminal block for system connection

LL Bus line connection terminals

CFP1 CFP2 Floor door call input

Legend: buttons and indicator LEDs

▶ Press the desired button once to activate the associated function

Wait for approximately 1 sec. before pressing the same button again. Pressing the same button several times in quick succession will cancel the command.

Description of buttons

Audio activation
▶ Press the button to answer an incoming call.

Lock-release command (default)* [programmable]
▶ Press the key to activate the corresponding door lock.

1 **Actuator control** (default)* [programmable]
▶ Press the key to activate the corresponding relay.

2 **Secondary switchboard** (default)* [programmable]
▶ Press the key to call the secondary switchboard.

Silent mode (Privacy)
▶ Press the key to enable silencing of the ringtone on receipt of a call from the external unit and from the switchboard.

* To change the default settings and to program other functions, please refer to paragraphs **"Basic configuration", "Advanced configuration"**

Indicator LED description

steady on (in call): communication in progress
steady on (in standby): *Automatic answer (hands-free)* mode enabled
continuous flashing: incoming call

slow flashing: door open
1 flash after pressing button: door open confirmed
continuous flashing: incoming call

steady on: silent (Privacy) mode enabled
3 flashes (every 5 sec.): door opening upon call function (Doctor) enabled
continuous flashing: device in programming mode
4 flashes: system busy

Pressing and holding keys (Disabled by default from firmware version 1.2.0)

Pressing and holding keys adds further functions to the door-entry phone.

Carry out the procedure described below to enable - or disable, depending on the factory setting - the press and hold feature:

√ Door-entry phone in standby.
1. Take note of the S2 DIP-switch settings.
2. Enter programming mode by setting S2 DIP-switches 1, 3, 5 to ON.
» *the LED flashes*
3. Press 1 to enable (or press 2 to disable).
4. Make sure the key flashes 4 times and the confirmation tone is emitted.
5. Restore the initial configuration of the S2 DIP-switches.
» *LED switches off*

Once the procedure is complete, you will be able to enable the following functions:

Automatic lock-release on receipt of call (Doctor mode)
Automatic activation of the Lock-release relay on receipt of a call originating from the external unit.
▶ *Press and hold (4 sec.) the programmed button to enable/disable the function.*

Automatic Answer (Hands-Free mode)
Automatic audio opening on receipt of a call.
▶ *Press and hold (5 sec.) the audio activation button to enable/disable the function.*
» ENABLING: + LED STEADY ON
» DISABLING: + LED OFF

Technical specifications

	Art. 6750W	Art. 6751W
GENERAL DATA		
Height (mm)	105	105
Width (mm)	105	105
Depth (mm)	20	20
HARDWARE CHARACTERISTICS		
Removable terminals	Yes	Yes
SETTINGS		
Loudspeaker volume control	Yes	Yes
Ringtone volume adjustment	Yes	Yes
MAIN FEATURES		
Audio/video system	Yes	Yes
Surface mounting	Yes	Yes
Desk base mounting	Yes	Yes
Hands-free function	Yes	Yes
Induction loop function	Yes	
Colour	White	White
Sensitive touch technology	Yes	Yes
Total buttons (no.)	5	5
LED indicators (no.)	3	3
FUNCTIONS		
Actuator control function	Yes	Yes
Switchboard call function	Yes	Yes
Priority calls	Yes	Yes
Intercom function	Yes	Yes
Selective intercom call	Yes	Yes
Multiple address call	Yes	Yes
Privacy function	Yes	Yes
Doctor	Yes	Yes
Floor door call function	Yes	Yes
Electronic ringtone	Yes	Yes
Customisable ringtone	Yes	Yes
Key button function	Yes	Yes
COMPATIBILITY		
Simplebus 2 audio/video system	Yes	
Building Kit audio/video system	Yes	
Audio/Video kit system	Yes	
Simplebus 2 audio system		Yes
TECHNICAL SPECIFICATIONS		
Power supply voltage	22-35 VDC	22-35 VDC
Absorption during communication (mA)	130	130
Operating temperature (°C)	5 to 40	-5 to 40
Operating humidity (max % RH)	25 to 75	25 to 75
Weight: (g)	150	150
Terminals	L L CFP1 CFP2	L L CFP1 CFP2

Surface mounting

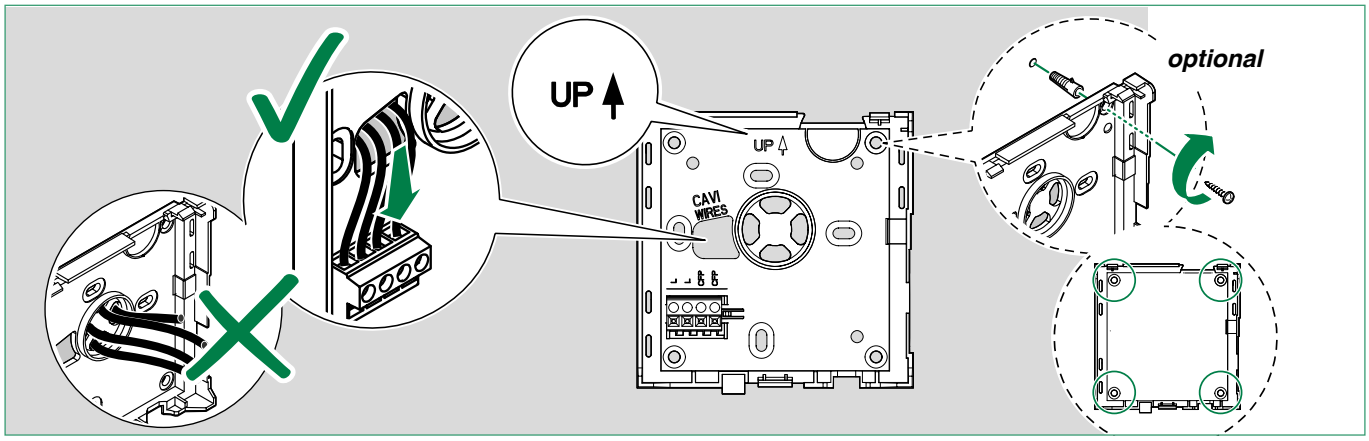

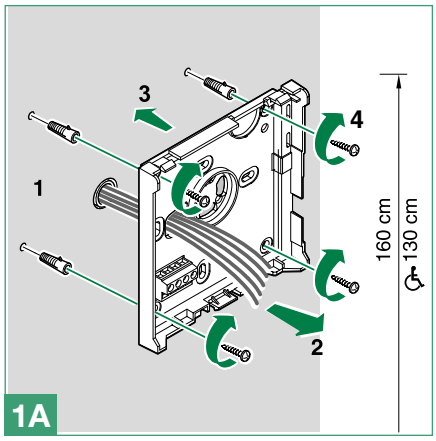

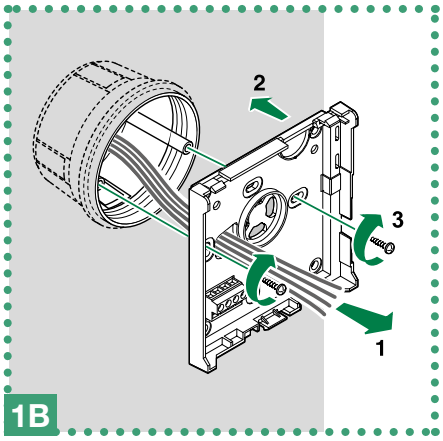

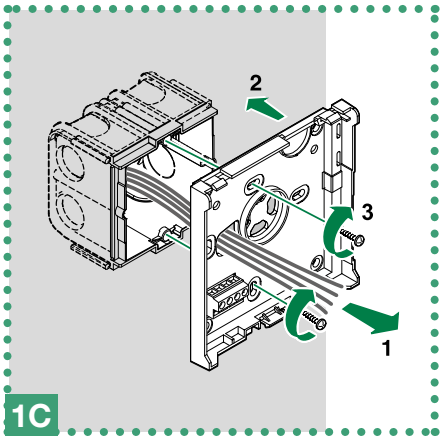

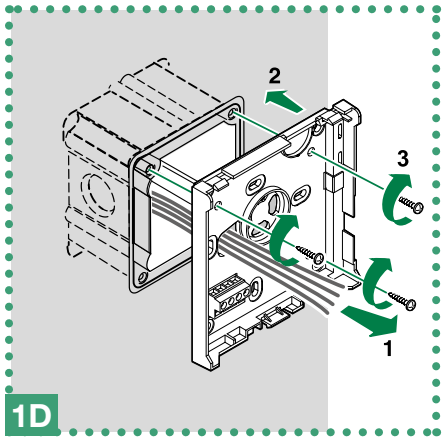

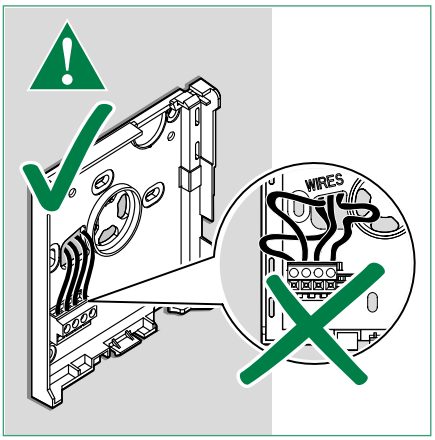

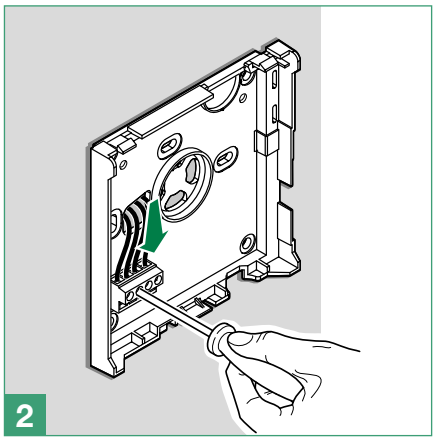

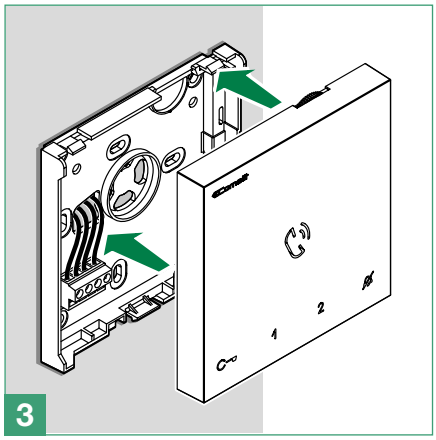

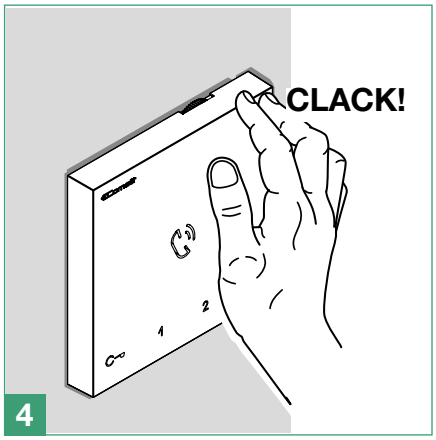

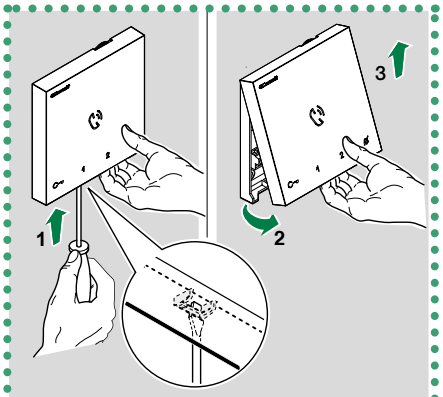

» *REMOVAL*

Terminal removal

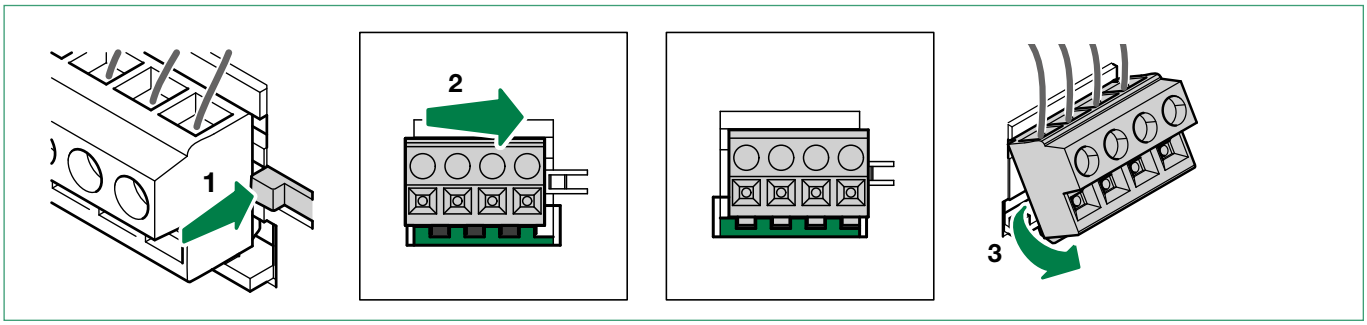

Terminal installation

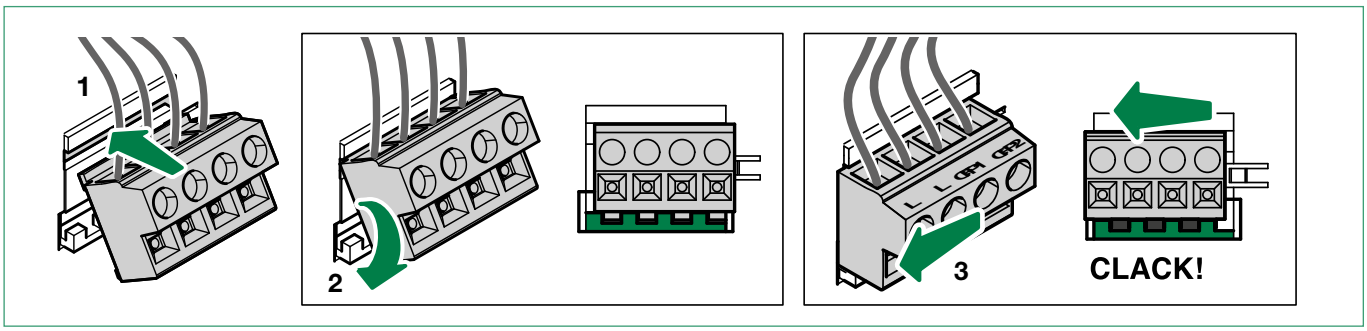

Connections

Connection to the video entry riser and the floor door call button

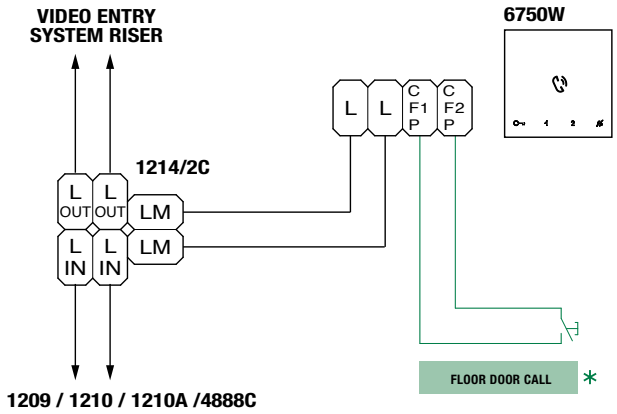

Branched connection to the video entry system riser from the door entry monitor

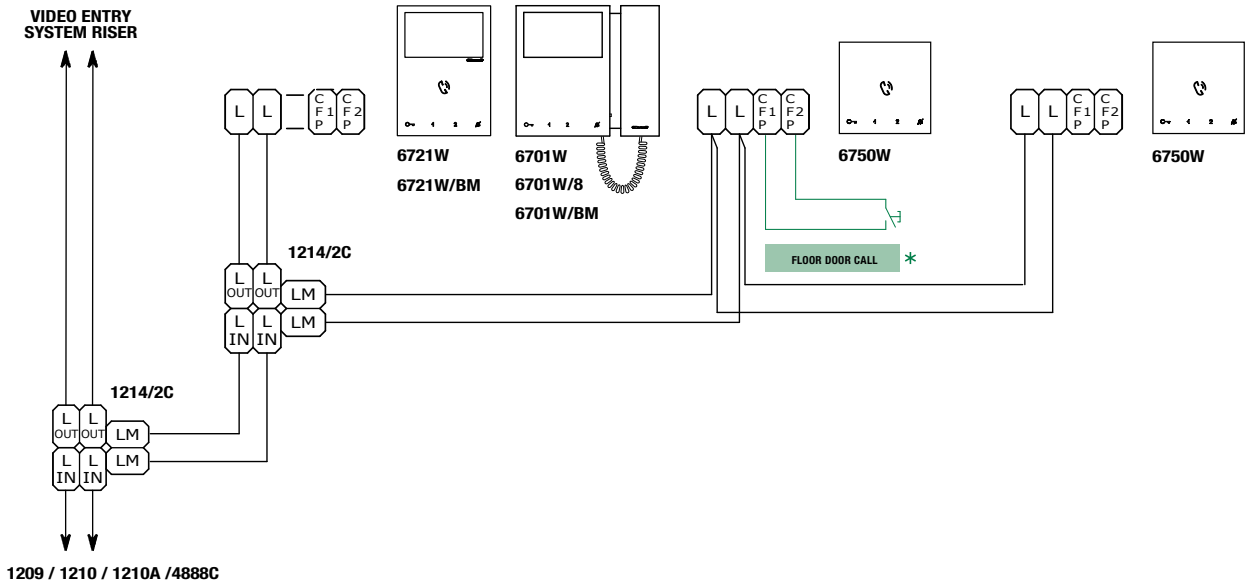

Connection to the door entry riser and the floor door call button

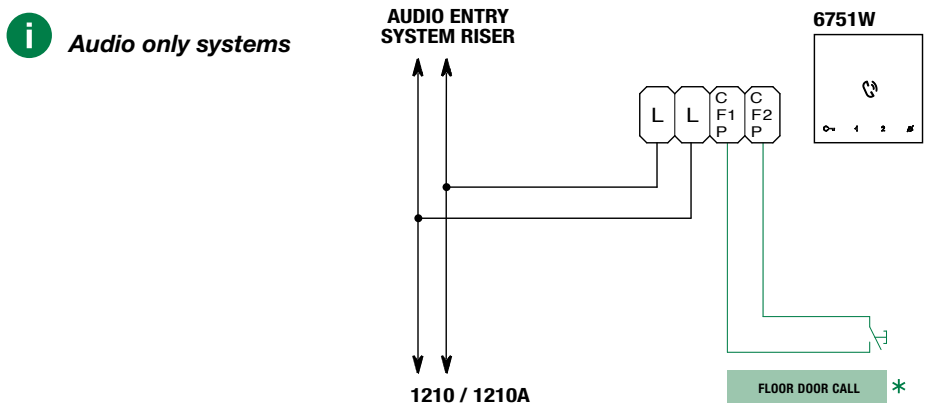

* **20 m MAX** - Use shielded cable for the connection and do not route the cables in the vicinity of heavy inductive loads or power supply cables (230 V / 400 V).

Where multiple door-entry phones or door entry monitors have the same user code, connect the CFP button on one only; all the devices will ring simultaneously.

Button configuration

By default the buttons control the functions in row **A** *("Standard configuration" table).*

It is possible to change the default configuration of the buttons by changing the positions of S2 DIP-switches 1-2-3-4 on the rear of the door-entry phone to one of the combinations (B-P) suggested in the table. All the buttons will change function.

Basic configuration

	DIP-switch **S2**				BUTTON PROGRAMMING		
	DIP 1	**DIP 2**	**DIP 3**	**DIP 4**	🔑	1	2
▶ **A** (default)	**OFF**	**OFF**	**OFF**	**OFF**	**AP**	**ACT**	**CCS**
B	ON	OFF	OFF	OFF	AP	ACT	INT
C	OFF	ON	OFF	OFF	AP	INT	D
D	ON	ON	OFF	OFF	AP	ACT	CCP
E	OFF	OFF	ON	OFF	ACT	ACT	ACT
F	ON	OFF	ON	OFF	AP	ACT	K
G	OFF	ON	ON	OFF	AP	ACT	D
H	ON	ON	ON	OFF	AP	INTb	INT
I	OFF	OFF	OFF	ON	AP	CCS	PAN
J	ON	OFF	OFF	ON	AP	K	CCS
K	OFF	ON	OFF	ON	AP	CCP	K
L	ON	ON	OFF	ON	AP	PAN	CCP
M	OFF	OFF	ON	ON	AP	INTb	PAN
N	ON	OFF	ON	ON	AP	INT	INT
P	OFF	ON	ON	ON	NULL	NULL	NULL
	ON	ON	ON	ON	PROG		

Legend

AP	Lock-release
ACT	Actuator
CCP*	Call to main switchboard
CCS*	Call to secondary switchboard
K	Caretaker door-entry phone call
D**	Automatic door opening on receipt of call [Doctor mode]
PAN *	Priority call to switchboard
INT	Intercom call (general programmable or to selective address). Single-family call by default
INTb	Two-family intercom [KIT only]
NULL	No function
PROG	With these S2 DIP-switch settings, the buttons control the programmed functions as in **"Advanced configuration"**.

* Cannot be used in Kit systems

** Pressing and holding enables / disables the function, *see* **"Pressing and holding keys (Disabled by default from firmware version 1.2.0)"**

Advanced configuration

If the standard configuration settings (A-P) do not reflect requirements, the buttons can be programmed differently by carrying out the steps below. After programming, set S2 DIP-switches 1-2-3-4 (PROG) to ON. With these DIP-switch settings, the buttons manage the programmed functions. The buttons that are NOT programmed control the functions in row A (table **"Basic configuration"**).

Intercom call

Introduction

By "**General** intercom call" we mean a call from a door-entry phone/door entry monitor to the devices (in the same apartment or another apartment) identified by the call address for the apartment (user code).

By "Intercom call to **selective address**" we mean a call from a door-entry phone/door entry monitor to a device (or several) identified by a specific (selective) address which is different from the call address for the apartment (user code).

General and selective intercom calls CANNOT be used together on the same riser!

General intercom call: button programming

1. Take note of the S1 DIP-switch settings.

2. To enter programming mode, set S2 DIP-switch 6 to ON.

» *the LED flashes*

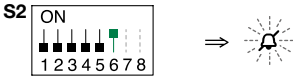

3. Refer to the table **"Basic configuration"** to identify a DIP-switch combination in which the intercom function (INT or INTb) corresponding to the button you want to program appears, then set the **S2 DIP-switches**.

Example: For button 1= Intercom (INT) set S2 DIP-switches 1-2-3-4 as specified in row "C" in the **"Basic configuration"** table.

4. Set the **S1 DIP-switches** according to the call address of the desired apartment.

See **"Addressing table"**

5. Press and release the button to be associated with the function.

» *Correct procedure indication*: the LED flashes for a few seconds and a confirmation tone sounds.

» *Procedure error indication: the LED flashes for few seconds and an error tone sounds.*

✓ When programming using several buttons, continue programming the next key by repeating the process from step 4 onwards.

6. Exit programming mode by setting S2 DIP 6 to OFF.

» *LED switches off*

7. Set S2 **DIP-switches 1-2-3-4** to ON.

8. Return S1 DIP to the original combination.

Intercom call to **selective** address: button programming

1. **The steps illustrated in the paragraph "Assigning a selective address" should be carried out on the devices involved in the intercom call.**

2. Take note of the S1 DIP-switch settings.

3. To enter programming mode, set S2 DIP-switch 6 to ON.

» *the LED flashes*

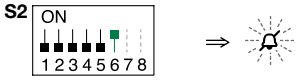

4. Refer to the table **"Basic configuration"** to identify a DIP-switch combination in which the intercom function (INT or INTb) corresponding to the button you want to program appears, then set the **S2 DIP-switches**.

5. Use the S1 DIP-switches to set the ***selective*** address of the device you wish to call. **"TABLE B"**.

For group calls, simultaneously set the desired selective addresses (max. 3) to ON.

6. Press and release the button to be associated with the function.

» *Correct procedure indication: the LED flashes for few seconds and a confirmation tone sounds.*

» *Procedure error indication: the LED flashes for few seconds and an error tone sounds.*

✓ when programming using several buttons, continue programming the next key by repeating the process from step 5 onwards.

7. Exit programming mode by setting S2 DIP-switch 6 to OFF.

» *LED switches off*

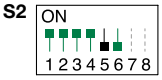

8. Set S2 **DIP 1-2-3-4** to ON.

9. Return S1 DIP to the original combination.

Selective intercom address

TABLE B					
Code	S1 DIP-switch ON	Code	S1 DIP-switch ON	Code	S1 DIP-switch ON
1	1 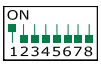	**4**	4 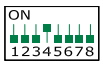	**7**	7 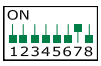
2	2 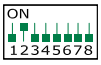	**5**	5 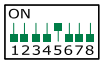	**8**	8 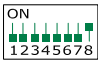
3	3 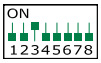	**6**	6 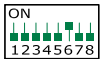		

Assigning a selective address

(Steps only need to be carried out for "Intercom call to selective address" programming)

1.	2.	3.	4.
Take note of the S1, S2 settings and **restore them when programming** is complete.	**S1:** Set an address. (Table B) Example: 3 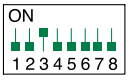	**S2:** Set the DIP-switches as shown in the figure. 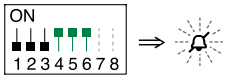	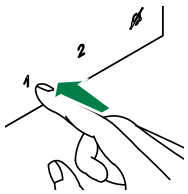 ✓OK prog:

Assign one of the 8 addresses available in **"TABLE B"** to each device involved in the intercom call.

- You can assign the **same** selective intercom address to a maximum of 3 devices.

Deleting the selective address of the door-entry phone

1.	2.	3.
Take note of the S1, S2 settings and **restore them when programming** is complete.	Set the DIP-switches as shown in the figure. 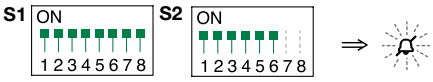	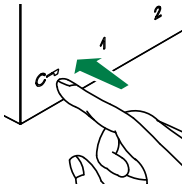 ✓OK prog:

Generic actuator, coded actuator

Generic actuator: button programming

1.	Take note of the S1 DIP-switch settings.
2.	To enter programming mode, set S2 DIP-switch 6 to ON. 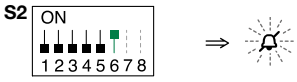 » *the LED flashes*
3.	Refer to the table **"Basic configuration"** to identify a DIP-switch combination in which the actuator function (ACT) corresponding to the button you want to program appears, then set the S2 DIP-switches.
4.	Set all the S1 DIP-switches to the ON position. 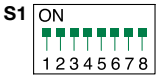
5.	Press and release the button to be associated with the function. » *Correct procedure indication: the LED flashes for few seconds and a confirmation tone sounds.* » *Procedure error indication: the LED flashes for few seconds and an error tone sounds.*
6.	Exit programming mode by setting S2 DIP-switch 6 to OFF. 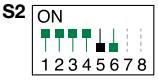 » *LED switches off*
7.	Set S2 DIP-switches 1-2-3-4 to ON.
8.	Return S1 DIP-switches to the original combination.

Coded actuator: button programming

1. Take note of the S1 DIP-switch settings.

2. To enter programming mode, set S2 DIP-switch 6 to ON.

» *the LED flashes*

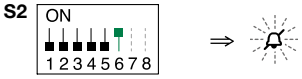

3. Refer to the table **"Basic configuration"** to identify a DIP-switch combination in which the actuator function (ACT) corresponding to the button you want to program appears, then set the S2 DIP-switches.

4. Set the S1 DIP-switches with the desired code, according to **"Addressing table"**

5. Press and release the button to be associated with the function.

» *Correct procedure indication: the LED flashes for few seconds and a confirmation tone sounds.*

» *Procedure error indication: the LED flashes for few seconds and an error tone sounds.*

6. Exit programming mode by setting S2 DIP-switch 6 to OFF.

» *LED switches off*

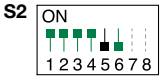

7. Set S2 DIP-switches 1-2-3-4 to ON.

8. Return S1 DIP-switches to the original combination.

Other functions: button programming

1. To enter programming mode, set S2 DIP-switch 6 to ON.

» *the LED flashes*

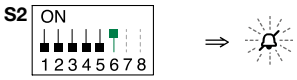

2. Refer to the table **"Basic configuration"** to identify a DIP-switch combination in which the desired functions corresponding to the buttons you want to program appear, then set the S2 DIP-switches.

Example: For button 1= Call to secondary switchboard (CCS) and button 2= Panic (PAN), set S2 DIP-switches 1-2-3-4 as specified in row **I** of the **"Basic configuration"** table.

3. Press and release the buttons involved in the change.

» *Correct procedure indication: the LED flashes for few seconds and a confirmation tone sounds.*

» *Procedure error indication: the LED flashes for few seconds and an error tone sounds.*

4. Exit programming mode by setting S2 DIP 6 to OFF.

» *LED switches off*

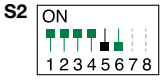

5. Set S2 DIP-switches 1-2-3-4 to ON.

Programming range

Take note of the S2, S1 settings and restore on completion of programming

▶ **Carry out steps 1 to 4**

	1.	2.	3.		4.
Range minimum address	S1 ON 1 2 3 4 5 6 7 8 set code. **"Addressing table"**	S2 ON 1 2 3 4 5 6 7 8 ⇓			
Range maximum address					
Enable range				⇒	S2 ON 1 2 3 4 5 6 7 8 ⇓
Disable range					
Deleting the range	S1 ON 1 2 3 4 5 6 7 8	S2 ON 1 2 3 4 5 6 7 8 ⇓	2 sec		

Changing the ringtone

1. Press and hold for 6 sec.

» a confirmation tone is emitted
» the LED flashes

✓ the procedure can only take place while the system is in standby; otherwise the LED will flash 4 times to inform the user that the system is busy

2 Press and release

once (1 confirmation tone sounds) to change the ringtone for calls from the external entrance panel.
twice (2 confirmation tones sound) to change the ringtone for calls from the switchboard.
3 times (3 confirmation tones sound) to change the ringtone for intercom calls made from the door entry monitor/door-entry phone.
4 times (4 confirmation tones sound) to change the floor door call ringtone.

Any further pressing of the button repeats the sequence described above.

3. Press and release 1 to scroll through the available ringtones in sequence.

4. Press 2 to confirm selection of the last ringtone heard and to exit change ringtone mode.

» a confirmation tone is emitted
» LED switches off

Programming reset

Factory settings:

- Button functions for the S2 DIP 1-2-3-4 combination
- Intercom address absent
- Range function and min./max. addresses absent
- Ringtone reset
- “Automatic answer”, “Automatic door opening on receipt of call” and “Silent” mode disabled

1.	2.	3.	
Take note of the S1, S2 settings and **restore them when programming** is complete.	Set the DIP-switches as shown in the figure. 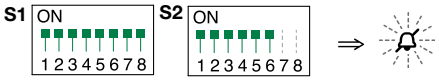	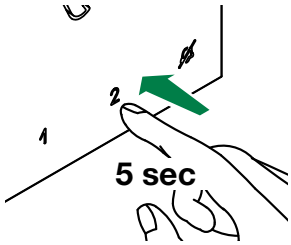	✓ OK prog:

Addressing table

Code	DIP-switch ON														
1	1	31	1,2,3,4,5	61	1,3,4,5,6	91	1,2,4,5,7	121	1,4,5,6,7	151	1,2,3,5,8	181	1,3,5,6,8	211	1,2,5,7,8
2	2	32	6	62	2,3,4,5,6	92	3,4,5,7	122	2,4,5,6,7	152	4,5,8	182	2,3,5,6,8	212	3,5,7,8
3	1.2	33	1.6	63	1,2,3,4,5.6	93	1,3,4,5,7	123	1,2,4,5,6.7	153	1,4,5,8	183	1,2,3,5,6.8	213	1,3,5,7,8
4	3	34	2.6	64	7	94	2,3,4,5,7	124	3,4,5,6,7	154	2,4,5,8	184	4,5,6,8	214	2,3,5,7,8
5	1.3	35	1,2,6	65	1.7	95	1,2,3,4,5.7	125	1,3,4,5,6.7	155	1,2,4,5,8	185	1,4,5,6,8	215	1,2,3,5,7.8
6	2.3	36	3.6	66	2.7	96	6.7	126	2,3,4,5,6.7	156	3,4,5,8	186	2,4,5,6,8	216	4,5,7,8
7	1,2,3	37	1,3,6	67	1,2,7	97	1,6,7	127	1,2,3,4,5,6,7	157	1,3,4,5,8	187	1,2,4,5,6.8	217	1,4,5,7,8
8	4	38	2,3,6	68	3.7	98	2,6,7	128	8	158	2,3,4,5,8	188	3,4,5,6,8	218	2,4,5,7,8
9	1.4	39	1,2,3,6	69	1,3,7	99	1,2,6,7	129	1.8	159	1,2,3,4,5.8	189	1,3,4,5,6.8	219	1,2,4,5,7.8
10	2.4	40	4.6	70	2,3,7	100	3,6,7	130	2.8	160	6.8	190	2,3,4,5,6.8	220	3,4,5,7,8
11	1,2,4	41	1,4,6	71	1,2,3,7	101	1,3,6,7	131	1,2,8	161	1,6,8	191	1,2,3,4,5,6,8	221	1,3,4,5,7.8
12	3.4	42	2,4,6	72	4.7	102	2,3,6,7	132	3.8	162	2,6,8	192	7.8	222	2,3,4,5,7.8
13	1,3,4	43	1,2,4,6	73	1,4,7	103	1,2,3,6,7	133	1,3,8	163	1,2,6,8	193	1,7,8	223	1,2,3,4,5,7,8
14	2,3,4	44	3,4,6	74	2,4,7	104	4,6,7	134	2,3,8	164	3,6,8	194	2,7,8	224	6,7,8
15	1,2,3,4	45	1,3,4,6	75	1,2,4,7	105	1,4,6,7	135	1,2,3,8	165	1,3,6,8	195	1,2,7,8	225	1,6,7,8
16	5	46	2,3,4,6	76	3,4,7	106	2,4,6,7	136	4.8	166	2,3,6,8	196	3,7,8	226	2,6,7,8
17	1.5	47	1,2,3,4,6	77	1,3,4,7	107	1,2,4,6,7	137	1,4,8	167	1,2,3,6,8	197	1,3,7,8	227	1,2,6,7,8
18	2.5	48	5.6	78	2,3,4,7	108	3,4,6,7	138	2,4,8	168	4,6,8	198	2,3,7,8	228	3,6,7,8
19	1,2,5	49	1,5,6	79	1,2,3,4,7	109	1,3,4,6,7	139	1,2,4,8	169	1,4,6,8	199	1,2,3,7,8	229	1,3,6,7,8
20	3.5	50	2,5,6	80	5.7	110	2,3,4,6,7	140	3,4,8	170	2,4,6,8	200	4,7,8	230	2,3,6,7,8
21	1,3,5	51	1,2,5,6	81	1,5,7	111	1,2,3,4,6.7	141	1,3,4,8	171	1,2,4,6,8	201	1,4,7,8	231	1,2,3,6,7.8
22	2,3,5	52	3,5,6	82	2,5,7	112	5.67	142	2,3,4,8	172	3,4,6,8	202	2,4,7,8	232	4,6,7,8
23	1,2,3,5	53	1,3,5,6	83	1,2,5,7	113	1,5,6,7	143	1,2,3,4,8	173	1,3,4,6,8	203	1,2,4,7,8	233	1,4,6,7,8
24	4.5	54	2,3,5,6	84	3,5,7	114	2,5,6,7	144	5.8	174	2,3,4,6,8	204	3,4,7,8	234	2,4,6,7,8
25	1,4,5	55	1,2,3,5,6	85	1,3,5,7	115	1,2,5,6,7	145	1,5,8	175	1,2,3,4,6.8	205	1,3,4,7,8	235	1,2,4,6,7.8
26	2,4,5	56	4,5,6	86	2,3,5,7	116	3,5,6,7	146	2,5,8	176	5,6,8	206	2,3,4,7,8	236	3,4,6,7,8
27	1,2,4,5	57	1,4,5,6	87	1,2,3,5,7	117	1,3,5,6,7	147	1,2,5,8	177	1,5,6,8	207	1,2,3,4,7.8	237	1,3,4,6,7.8
28	3,4,5	58	2,4,5,6	88	4,5,7	118	2,3,5,6,7	148	3,5,8	178	2,5,6,8	208	5,7,8	238	2,3,4,6,7.8
29	1,3,4,5	59	1,2,4,5,6	89	1,4,5,7	119	1,2,3,5,6.7	149	1,3,5,8	179	1,2,5,6,8	209	1,5,7,8	239	1,2,3,4,6,7,8
30	2,3,4,5	60	3,4,5,6	90	2,4,5,7	120	4,5,6,7	150	2,3,5,8	180	3,5,6,8	210	2,5,7,8	*240	5,6,7,8

* NOTE: Code 240 is reserved for the porter switchboard

System performance and layouts

Art. 6750W

For further information of system performance and to view installation layouts, click on the system type that best meets your requirements:

- Simplebus2 audio/video with 1210/1210A
- Simplebus2 audio/video with 4888C

Art. 6751W

For further information of system performance and to view installation layouts, click on the system type that best meets your requirements:

- Simplebus2 audio with 1210/1210A

2nd edition 03/2021
code 2G40002497

CERTIFIED MANAGEMENT SYSTEMS

ISO 9001 ISO 14001

www.comelitgroup.com
Via Don Arrigoni, 5 - 24020 Rovetta (BG) - Italy

Comelit®
Passion.Technology.Design.