UR FOG MODULAR

INSTALLATION AND USE MANUAL

MODULAR 200

MODULAR 300

MODULAR 400

MODULAR 500

MODULAR 800

ENGLISH MANUAL

WARNING!

All UR FOG fogging systems should only be used with UR FOG-branded fluids.
It is strictly forbidden to use any fluid not previously authorized in writing by UR FOG srl.

SUMMARY

01	Package contents	page 2
02	Product presentation	page 3
03	Conditions of use and warnings	page 3
04	Installation tips to install fogging systems	page 4
05	Technical specifications and battery endurance/backup	page 5
06	Preparation to the installation	page 5
07	Electrical power supply	page 6
08	Power supply connection	page 7
09	Input / output description and connections	page 7
10	Connection examples	page 9
11	Shooting time setting	page 11
12	Fluid bag installation, exchange and reset	page 13
13	Front LEDs meaning	page 14
14	Maintenance	page 15
15	Reset from fault condition	page 17
16	Faults and possible solutions	page 16
17	Warranty and conditions of use	page 18
18	Maintenance and operations	page 19

The **conditions of use** will be automatically accepted by breaking the security labels on the product.

01 PACKAGE CONTENT

Inside the package you will find:

1. A fogging machine Modular 200/300/400/500/800 model
2. A warning label to indicate the device presence
3. Installation and use manual

02 PRODUCT PRESENTATION

Thank you for purchasing a UR Fog product
The great technological innovations such as the fluid injection system, the disposable bag, the ecological and economic system for the complete emptying of the bag, together with the heating system, make the Modular fogging systems the best performing devices in the security market.

- **Simple**: machine easy to install and able to be integrated to any existing alarm system; they lodge 1 fog fluid bag.
- **Cheap**: the lowest power consumption among fogging systems.

03 CONDITIONS OF USE AND WARNINGS

The fog generated by UR Fog does not create problems or injuries to people during a short stay in a room filled with fog, if the system is used according to the manufacturer's recommendations.
The generated fog is certified as safe for people and animals from an authorized international certification company and it is proven that it does not leave any residual.
UR Fog products are certified respecting European laws and regulations.
Any certifications required in specific countries are a responsibility of the distributor of that specific country.

The documents related to certifications can be requested by mail to: **support@urfog.com**.

It is not guaranteed by the manufacturer the use of UR Fog system in the presence of objects that may be damaged anyway by the contact with substances based on glycol, water and alcohol.
Any employee or worker that may be exposed to fog must be warned in advance and must be checked for any allergy to the substances listed above.
At the date of printing of this manual it has never been pointed out any problem related to any allergy.
UR Fog is in no way responsible for any damage or condition of use that has not been required and specifically approved by any specific written request prior to the installation of its products.
For fog fluid please refer to UR Fog fluid safety data sheet published on the website and carefully read it at **www.urfog.com**.
Contact a doctor if for any reason you swallow fog fluid or if after contact with eyes or skin you have any kind of reaction, and in any case wash it immediately with water and soap.
Do never stay for a long time in a room filled with fog.
Do not use charged bags that are not the ones suggested by UR Fog and never try to recharge them, they are made for a single use.
Follow your national rules for the dispose of empty bags.
Keep UR Fog bags out of reach of babies and animals.
The nozzle may be hot and touching it may cause burns.
Do not look directly into the nozzle.
Never use UR Fog products for any purpose that is not related to protection from thief or robbery (the choice of the conditions of use in case of robbery will be suggested by your security consultant).
Never use different fog fluids or add any other substance into the bags.
Do not use or keep charged UR Fog machines in vehicles and do never transport UR Fog before 24 hours since it has been shut off.
During transport it must be not armed.

04 INSTALLATION TIPS FOR FOGGING SYSTEMS

Please observe the following instructions for installing UR Fog:

1. This appliance is not intended for use by person (including children) with reduced physical, sensory or mental capabilities, or lack of experience and knowledge, unless they have been given supervision or instruction concerning use of the appliance by a person responsible for their safety.

2. Children should be supervised to ensure that they do not play with this appliance.

3. The machine must be installed avoiding to obstruct escape routes.

4. Verify the fog does not limit the visibility near: stairs, landings, moving objects that may cause falls, injuries or any damage to persons.

5. When using the product in multi-storey buildings, if the escape route runs through an area which is protected by a fogging system, it is recommended to install a vocal warning that provides instructions on the behavior to observe.

6. Do not look directly into the nozzle. Do not add any other substance into the bags.

7. The nozzle may reach high temperatures, touch it may cause burns.

8. When UR Fog produces fog avoid staying closer than 1 meter from the machine.

9. Before testing UR Fog, remember to report it in advance to the firefighters in your area to avoid false alarms.

10. Remember to put warning labels about the presence of UR Fog on the windows.

11. Report its installation to the firefighters in your area and to other institutions if needed.

12. It is necessary to add an external switch to separate the fog generator from the alarm system and it should be activated before the maintenance to avoid that input tests, for example, can activate the fog generator.

13. Never direct the fog jet towards an object or a wall less than 2 meters away and if possible increase the suggested minimum distance.
Thanks to the power of the jet, UR Fog reaches and exceeds more than 10 meters away in the first 3 seconds from the point where the machine is installed.

14. Setting the shooting time interval between the minimum and maximum shown in the shooting table, avoid “overshooting” even if the produced fog is dry and generally doesn’t leave residue.
A shot that goes far beyond the recommended seconds can create a residue problems in the room.

15. Install at an height of about 2,5 meters not to let it be reached, avoiding possible tampering.

16. Do not move the machine when it is still hot.

17. The main body of UR Fog, which has the heating system enclosed inside a metal frame, should not be opened unless by specific and authorized service centers. Do not open and touch for any reason the insulation before 24 hours UR Fog has been shut off. The internal part may reach really high temperature.

18. Do not activate the UR Fog machine before the installation is completed.

19. Insert the fluid bag as the last procedure and verify the anti-tampering function.

20. When the installation is finished, always test the system.

21. Install UR Fog avoiding any obstacles in front of it which can prevent the spreading of the fog.

22. The tip of a stranded conductor should not be soft-soldered where the conductor is subjected to contact pressure.

23. The UR Fog machine should not be exposed to water spray or dripping.

24. Request to UR Fog or its distributors to take part in courses for installers to ensure the optimal installation of the equipment.

25. The content of the bags is mechanically predetermined and can be subject to variations +/- 10%

05 TECHNICAL SPECIFICATIONS AND BATTERY ENDURANCE/BACKUP

* Industrial standard as from other manufacturers	MODULAR 200	MODULAR 300	MODULAR 400	MODULAR 500	MODULAR 800
Weight without bag	7,5 Kg	8 Kg	8,5 Kg	8,5 Kg	9,5 Kg
Max fog emission in a single shot	200 m^3	300 m^3	400 m^3	500 m^3	800 m^3
Total fog emission capacity with full bag	850 m^3	900 m^3	1200 m^3	1500 m^3	2400 m^3
Fog bag capacity	1 x 500 ml	1 x 500 ml	1 x 750 ml	1 x 750 ml	1 x 1000 ml
Working time without mains power	about 1 hour	about 1 hour	about 1 hour	about 1 hour	about 1 hour
Max power on heating system	350 W	350 W	280 W	280 W	280 W
Average power consumption during heating	350 W	350 W	280 W	280 W	280 W
Heating time	about 1 hour	about 1 hour	about 2 hours	about 2 hours	about 2 hours
Average power consumption	37 W	37 W	48 W	48 W	48 W
Maximum current consumption at 12 V	1,2 A	1,2 A	1,8 A	2 A	2,5 A
Battery type (not included)	Pb 2 Ah 12V	Pb 2 Ah 12V	Pb 2 Ah 12V	Pb 2 Ah 12V	Pb 2 Ah 12V
Door tamper	n/a	n/a	n/a	n/a	n/a
Anti-tear off and anti-shift	n/a	n/a	n/a	n/a	n/a

The "empty" signal shows that the unit is still capable of performing a full shot at full capability. However, it is recommended to always have at disposal a further recharge and to proceed at the substitution as soon as possible.

WARNING:

- **Do not disconnect the machine immediately after the shot**
- **Change the battery every two years**
- **Change the bag as soon as the "empty" signal appears**
- **The generator cannot be activated on a surface that does not allow air circulation from side slots**

06 PREPARATION TO THE INSTALLATION

I t is always recommended to secure the fog generator to a wall even when it is placed on a flat surface.
The optional bracket, mainly recommended for ceiling installation, can also simplify standard installation, by allowing to use back holes for the passage of cables. An optional orientable module is available for wall mounting.
Always verify that the bracket or the support surface are suitable for the weight of the machine.
I t is suggested not to install the machine behind walls in a limited closed area without a specific ventilation, in order to prevent a possible overheating.

CAUTION:. to avoid injuries please securely secure the fogging machine to the wall according to the installation instructions.
After removing the machine from the package, unscrew the four screws of the front panel.
Remove the front panel and uncover the electrical circuit (hereinafter referred to as PCB), the DC12V power supply, the thermal unit and the fluid bag.

07 ELECTRICAL POWER SUPPLY

The 230V input provides primary power to the heat exchanger and, by the use of a switching power supply, to the electronic board and the pump. The heat exchanger's working time without mains power ensures proper functioning for a certain period of time, usually around one hour, even in complete absence of mains power.
The functioning of the electronic part and the pneumatic system is guaranteed by the 12V 1.2 A battery (not included).
Although the heating element is over 300W, the average power consumption is between 30W and 50W on normal operation.

Do not use inverter or UPS if you are not sure that are designed to generate a pure sine wave. Square wave or rebuilt sine wave are not suitable for the device. Please ask to the UPS manufacturer the correspondence of such feature before proceeding with mains power connection.

- The max current to be considered for the device is 2 A
- The connection to the 230V or 110V electricity grid must be performed by a qualified technician.
- Connect the equipment to the electricity grid only after the installation is completed.
- It is necessary to connect the ground terminal.
- The system must be connected to the mains through an automatic switch (automatic switch, curie C, with Ih= 10 A and Idif= 30 mA,...) with breaking capacity based on the assumed fault current of the fogging system in the sampling point.

PLEASE NOTE THAT, AS ALL POWERED EQUIPMENT FROM THE ELECTRICITY GRID REQUIRED INSTALLATION, IT IS SUBJECT TO COMPLIANCE WITH RULES OF THE COUNTRY IN WHICH IT IS INSTALLED

IF FOR ANY EVENIENCE IT IS NEEDED TO REPLACE THE FUSE, USE ONLY FUSE WITH THE SAME SPECIFICATIONS AS THE ONE ALREADY INSTALLED.

EXAMPLE FOR 120V Model: Timed Fuse 250V H Type (1500 A) CERAMIC BODY FILLED WITH QUARTZ, REF. STD. EN60127-2-3/DIN41660 6,3 A (EXAMPLE OMEGA GT520263)

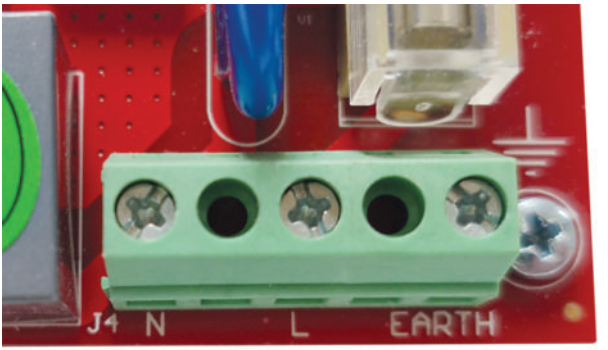

N **L** ⏚

While connecting the unit to the mains power, it is recommended to carefully care the connections and the screwing of the terminal block screws. Disconnecting or modifying the ground cable voids the warranty and can generate faults related to the temperature control.
Note: always check the unit AC voltage is corresponding to the mains power available in your country.
Different models are available for 120V AC and 230V AC mains power.
NEVER connect the unit to mains power if voltage doesn't match.

08 POWER SUPPLY CONNECTION

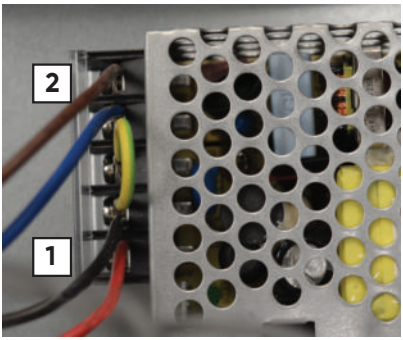

1 12V Power supply connection

2 230V Power supply connection

3 230V Mains power

4 Ground connection

5 Battery slot (battery not included)

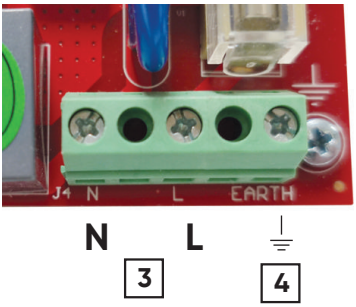

- The battery is essential for the safe use of the device, it is recharged by the board's circuitery.

- The predisposition 2A 12V lead-acid battery is lodged below the exchanger.

- To gain access to the battery slot it is necessary to remove the plastic front panel and possible stop screw.

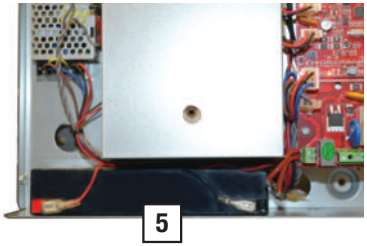

09 DESCRIPTION OF INPUT AND OUTPUT CONNECTIONS

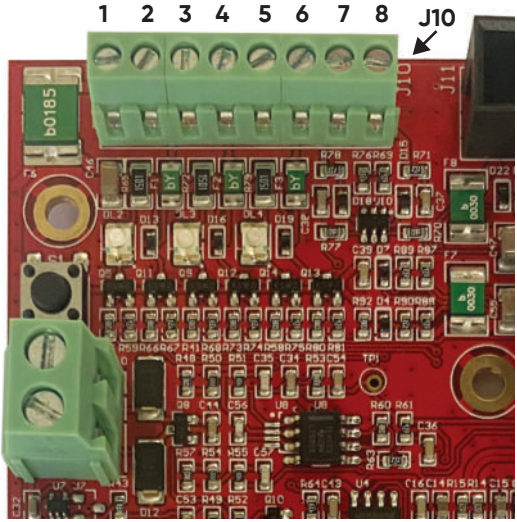

Connection PIN description

DC12V Power supply OUTPUT

1 + DC 12V Output (max 200 mA)
2 - 0V DC ground connected

OUTPUTS

3 ARD/SHP
4 EMPTY
5 ERROR

INPUTS

6 - GND
7 ARM Arming input
8 TRIG Shooting input

Note: both inputs accept dry contacts toward GND.

OUTPUT Power DC12V

1-2 Output DC12V (max 200 mA) for electrical connection of local devices connected to the board. It can be used to power a local PIR or a remote receiver. It is recommended not to overload the output.

OUTPUTS

3 ARD/SHP - Reports the ARMING status (W2 open), or is active when TRIG is in progress (W2 close).

4 EMPTY - reports the fluid EMPTY condition.

5 ERROR - reports a transient error or fault condition that voids functionality.
It's also activated when maintenance is needed, e.g. faulty battery, mains power fault or detected temperature out of range. If a mains power fault occurs it will be self resetted when correct mains power is back. We remind that it is necessary to connect this output to an alarm control panel or other equipment able to forward the signal to whom is concerned.

INPUTS

6 GND Reference GND for the inputs.

7 ARM Closing the contact ARM: the blue LED turns ON and then, if the unit has reached the correct temperature, it's ready to produce fog. During the shot, if the contact ARM is opened, it immediatly stops fog generation.

8 TRIG Closing the contact TRIG, if the unit is armed and has reached the correct temperature, it produces fog for the time set.
After the shot, all further shot commands within 120 seconds will not be processed.
In order to avoid accidental activations with consequent fog emission, the inputs are in "negative safety", so the disconnection of a wire does not cause their activation.
It is essential to carefully check the reliability of the connections and protect the cables to the alarm control unit where there is a risk of accidental or malicious damage.

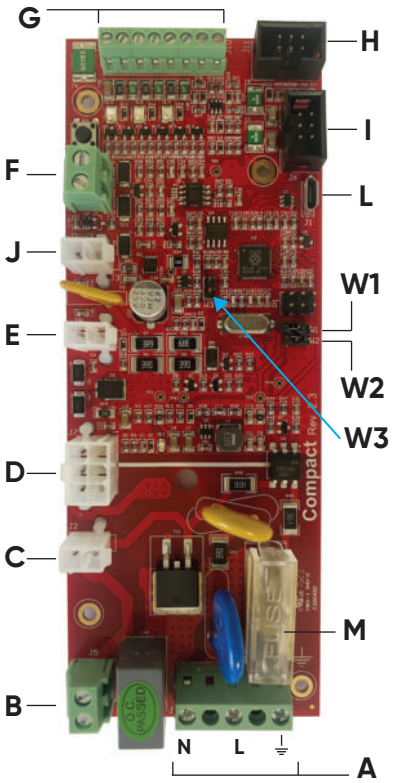

A) J4 Mains power connection
B) J5 Heater Resistor
C) J2 Thermal CutOff
D) J7 Power supply unit 230V AC/12V DC
E) J9 Battery 12V 1.2 A connector
F) J8 Thermal Sensor connector
G) J10 Inputs/Outputs connector
H) J11 RS232 port 1 connector
I) J6 RS232 port 2 connector
J) J3 Fluid Pump Connector
L) J1 USB port
M) F4 Mains fuse

W1 Shooting time setting enable

W2 Reserved (Open)

W3 Reserved (Open)

10 CONNECTION EXAMPLES

The diagrams and examples below are intended only for a “better understanding” of the operation of the inputs/outputs. None of the diagrams below represents the “single scheme to perform” as, in respect of the reference standard EN 50131-8:2019, there are precise indications and only using all inputs and outputs on the PCB it is possible to abide by the standard.

Is recommended to use the “HOLD-UP” function after a careful evaluation of the risks from a security consultant.

When MODULAR is ARMED, it becomes immediately ready to create fog.
For safety reasons and to avoid false fog emissions is suggested to program the alarm panel to allow enough time to leave the place.

A **MODULAR inputs connected to standard alarm panel outputs**

B **MODULAR inputs connected with a clean contact (relays) alarm panel outputs**

C **Wiring example of MODULAR outputs to drive LEDs and/or relays**

Note: in the following examples the output signal ARD/SHP has the following meaning depending on jumper W2:

W2 OPENED=ARM STATUS reported
W2 CLOSED=SHOT in PROGRESS STATUS reported

A - MODULAR inputs connected to standard alarm panel outputs

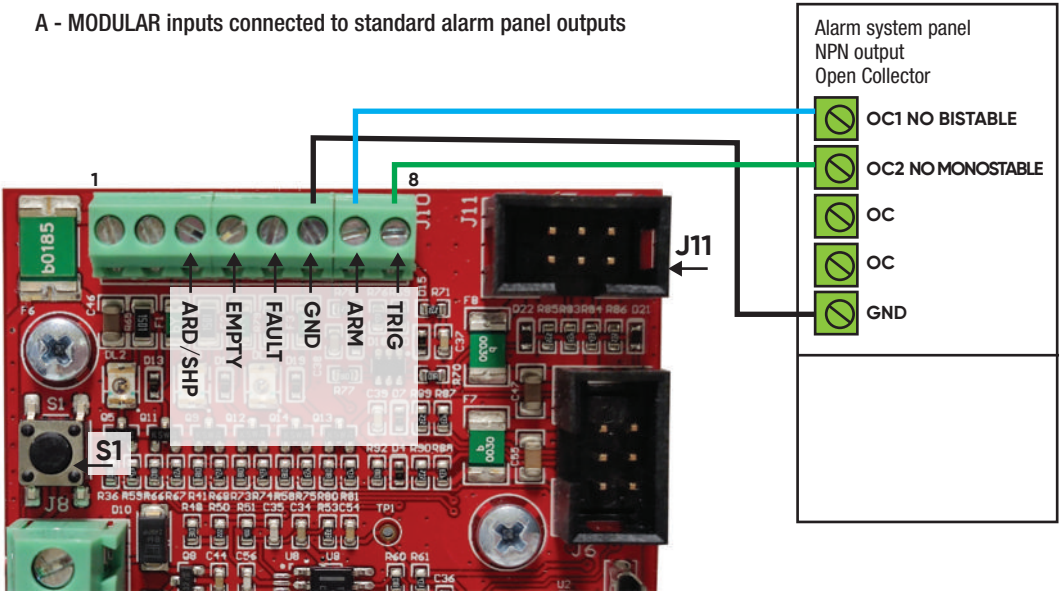

The ON/OFF output of this alarm panel is an Open Collector NPN that is OPEN with the alarm OFF and close to negative for all the time the alarm panel is active and monitoring.
The alarm panel output is normally open and close the contact during alarm time.

B - MODULAR inputs connected with a clean contact (relays) alarm panel outputs

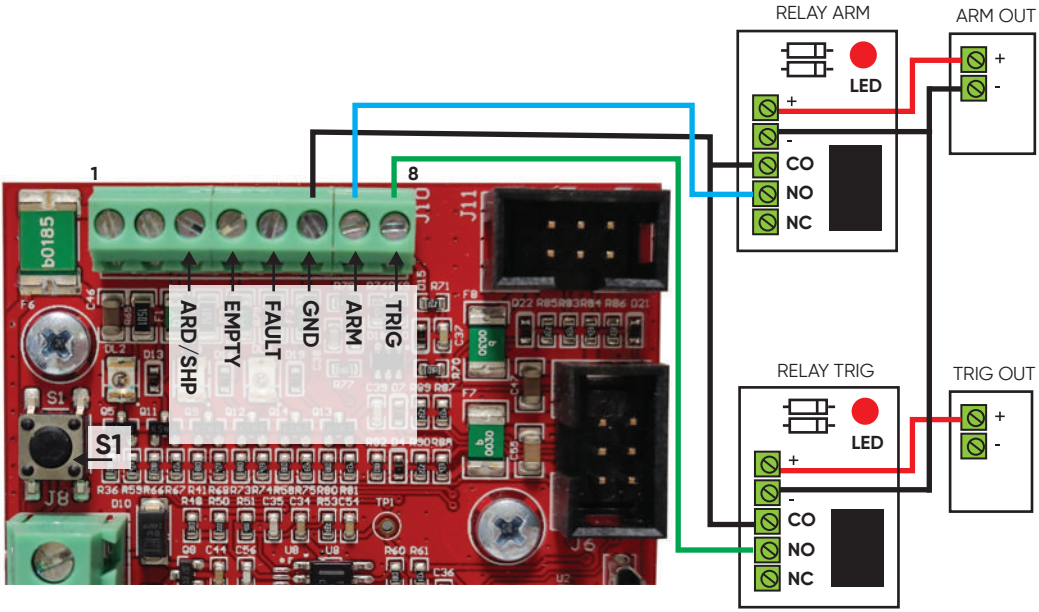

The ON/OFF output of this alarm panel is an open relay when panel is OFF that continuosly keep close for all the time the alarm panel is monitoring.
The alarm output of the panell is an open relay that close when alarm condition is detected.

C - Wiring example of MODULAR outputs to drive leds and/or relays

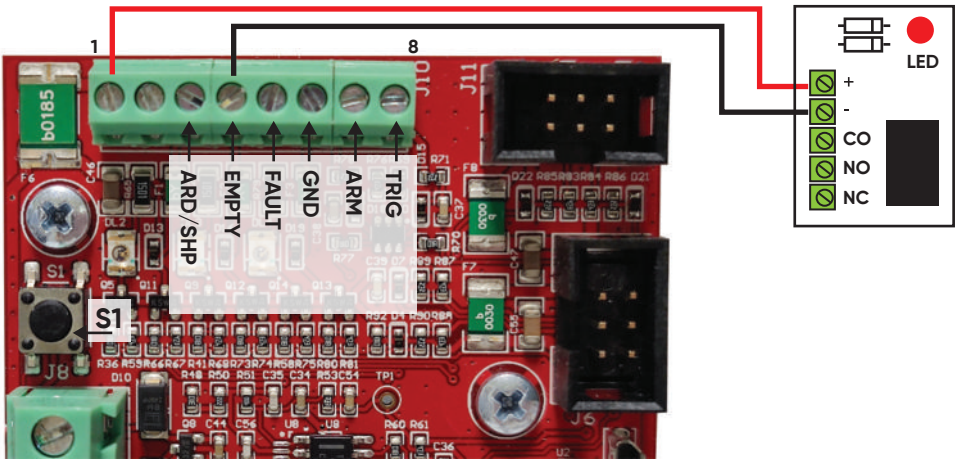

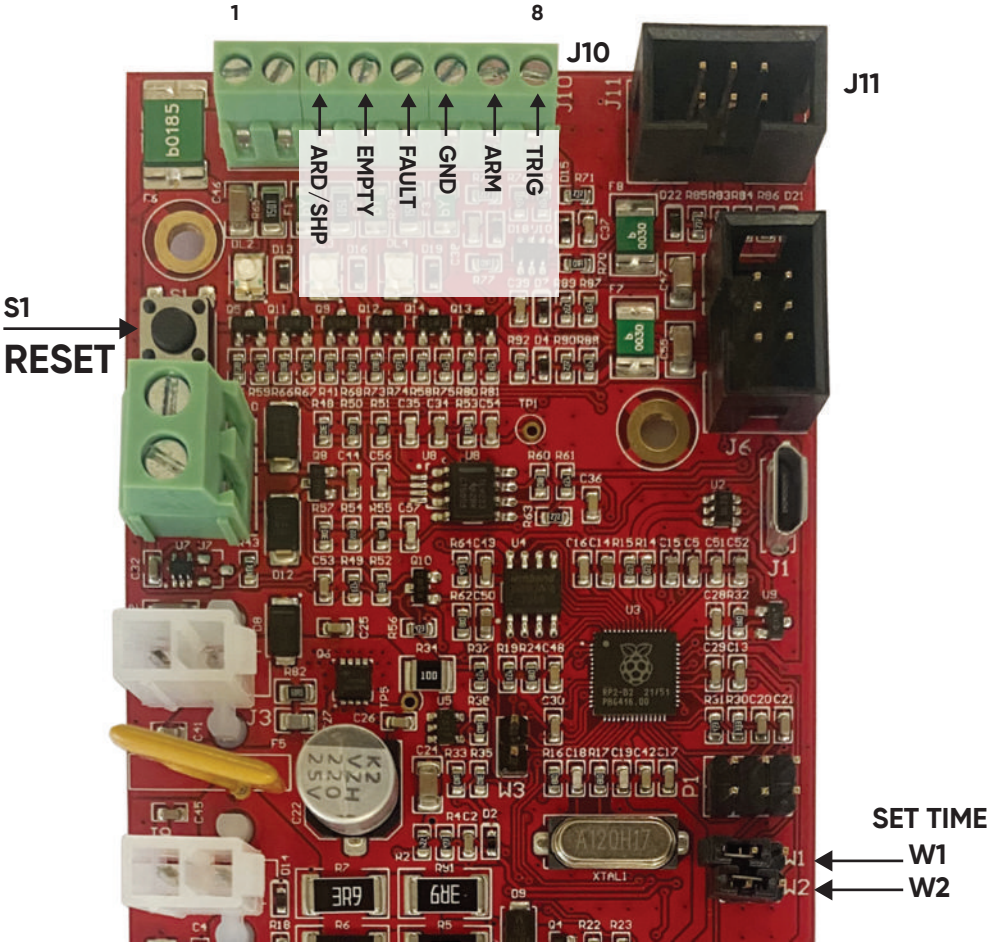

To set the shooting time, after opening the front panel, you must **CLOSE** the jumper **W1** in SET position then, holding down the button S1, the 3 LEDs on the front will flash and each flash is equivalent to one second fog emission. If you press the button again, the shooting time is not added to the one previously set, but will restart from zero.
If **S1** button is pressed for a time longer than the shooting time allowed for the unit, shooting time will be set to the maximum possible. Shooting time can be set according to desired seconds, but to correctly activate pipes refill in full security, it must be set to minimum 2 seconds. After setting the shooting time, to avoid wrong time settings, is suggested to keep the **W1** jumper **OPENED**.

In order to select the needed notification, customer can personalize the output signal as follow:

W2 OPENED = ARM STATUS – **ACTIVE** unit is armed – **OFF** unit not armed (DEFAULT).

W2 CLOSED = SHOT STATUS – **ACTIVE** unit is performing a shot – **OFF** no shot in progress.

SHOOTING TABLE MODULAR 200 (max 28 sec.)

m³ to protect	Seconds of emission	m³ to protect	Seconds of emission	m³ to protect	Seconds of emission
25 (75*)	4	75 (225*)	11	150 (450*)	21
50 (150*)	7	100 (300*)	14	200 (600*)	28

SHOOTING TABLE MODULAR 300 (max 40 sec.)

m³ to protect	Seconds of emission	m³ to protect	Seconds of emission	m³ to protect	Seconds of emission
50 (150*)	7	150 (450*)	21	300 (900*)	40
75 (225*)	9	200 (600*)	28		
100 (300*)	14	250 (750*)	35		

SHOOTING TABLE MODULAR 400 (max 46 sec.)

m³ to protect	Seconds of emission	m³ to protect	Seconds of emission	m³ to protect	Seconds of emission
50 (150*)	6	150 (450*)	21	300 (900*)	40
75 (225*)	9	200 (600*)	23	400 (1200*)	46
100 (300*)	12	250 (750*)	35		

SHOOTING TABLE MODULAR 500 (max 48 sec.)

m³ to protect	Seconds of emission	m³ to protect	Seconds of emission	m³ to protect	Seconds of emission
50 (150*)	6	150 (450*)	16	300 (900*)	27
75 (225*)	9	200 (600*)	21	400 (1200*)	37
100 (300*)	12	250 (750*)	24	500 (1500*)	48

SHOOTING TABLE MODULAR 800 (max 69 sec.)

m³ to protect	Seconds of emission	m³ to protect	Seconds of emission	m³ to protect	Seconds of emission
50 (150*)	5	200 (600*)	19	500 (1500*)	43
75 (225*)	8	250 (750*)	22	600 (1800*)	51
100 (300*)	10	300 (900*)	26	700 (2100*)	60
150 (450*)	14	400 (1200*)	35	800 (2400*)	69

* Industrial standard as from other manufacturers

The value in the first column indicates the volume of the room to be protected, with respective seconds of emission reported in the second column. The value in m³ varies depending on the density to be obtained. With the suggested value it is possible to get the maximum density recommended to ensure the absence of any residual. In places where a little residual causes no problems, it is possible to increase the shooting time. Please note that the more fog released, the more the time required to recover visibility. High levels of fog, over recommended limits, can leave residual. Any residue usually goes away by itself within 24/48 hours, otherwise, being soluble in water, it is enough to use a wet cloth for cleaning. If you desire to obtain an average of 1 meter visibility after 60 seconds, as specified by the standard EN 50131-8, as used as reference by all manufacturers of Fog generators, the number of shooting seconds it is to be reduced in half.

Insert the bag in place as show in picture.

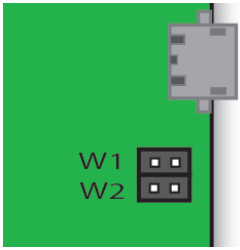

To reset the unit the jumper W1 must be open,
as shown in picture.

Insert a new bag and push metal connector till a "click" is heard.

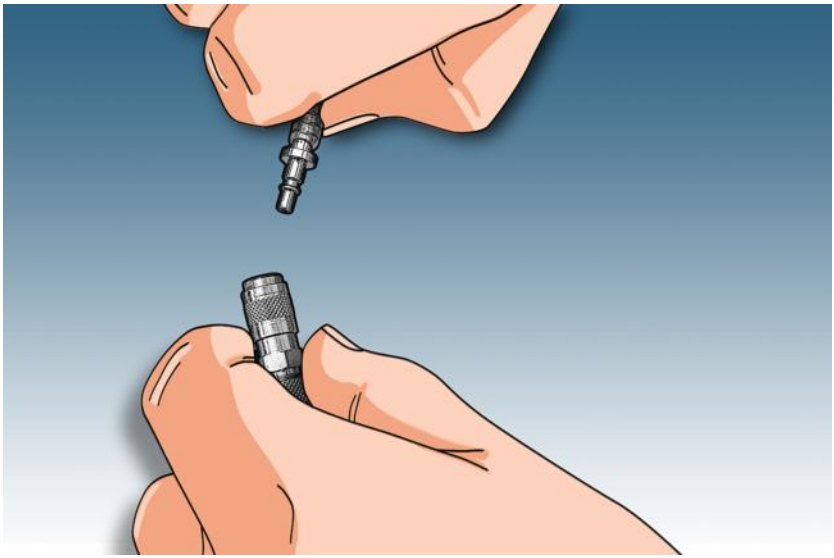

Metal plug

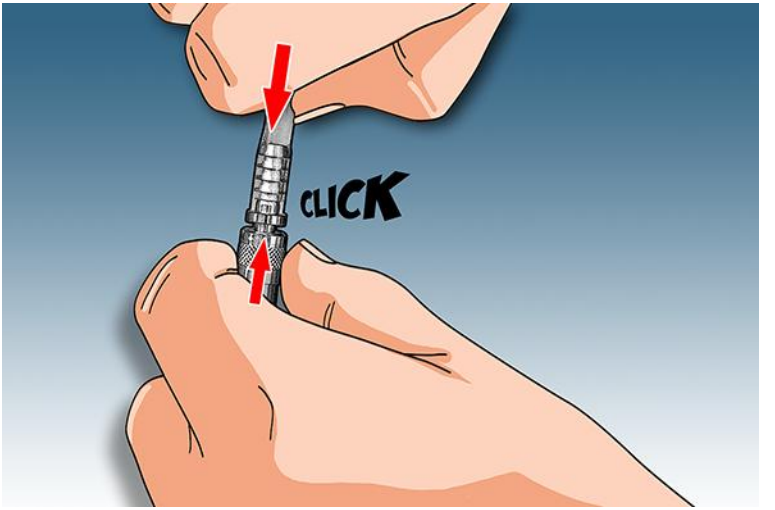

Metal plug

Press button S1

13 FRONT LEDS MEANING

EMPTY
RESERVE

RED LED (right)
ON: Error (Empty bag or low fluid , Mains power off/Battery low) or Fault
OFF: No error condition.

ARM
FAULT

BLU LED (center)
ON: Unit is armed and ready to shoot (with green led ON).
OFF: Unit is disarmed, shot not possible.

HEATING

GREEN LED (left)
ON: Unit has reached the correct temperature.
OFF: Unit is warming , no shot possible.

The EMPTY signal also means that fluid is going LOW.
It means that the unit has shot at least 100 seconds since last reset (Modular 200).

The central RED low power light means unit is powered on.
The RED FAULT led is on the top of the board.

14 MAINTENANCE

UR FOG fogging systems don't need special maintance , nevertheless is suggested a periodical check to the following parts by skilled operators:

1) Verify battery and power supply status.

2) Verify screws are firmly closed.

3) Verify the output nozzle is not damaged and without anyting inside.

4) Verify pneumatic circuit.

5) Verify once a year liquid pump.

BATTERY AND POWER SUPPLY CHECK
Verify that the output of the power supply without any load (battery unplugged) is 14,1 V on the PSU and 13,8 V on FASTON battery connectors.If a different value is noticed , set the trimmer on power supply.
Verify battery status (integrity check , no overheating);is suggested to replace the battery on 2 years base due to the heavy load during shots without mains power.

SCREWS
Verify that all fixing screws are correctly setted and eventually rescrew them.

OUTPUT NOZZLE
Verify that ouput nozzle is not damaged and that there is nothing inside blocking the fog ejection flow.

YEARLY PUMP FUNCTIONALITY TEST
The test is done executing a trial shot on the unit.To avoid creating too much fog during the test is suggested to stop the flow after a few seconds dearming the unit under test.The fog flow will immediatly stop.

15 RESET FROM FAULT CONDITION

Disconnect the units from any power source , both mains power and battery must be disconnected .Wait 15minutes and reconnect the battery and mains power.
This procedure helps to understand if the fault condition was due to mains power overload , serius power supply problems or problems in thermal loop.The fault condition is shown by the RED led ON (LED DL4 on the top), the output FAULT immediatly switchs and can indicate a transient or fixable condition (Eg. low battery power or no mains power), or a problem that cannot be fixed on site.

WARNING: The RED led (LED DL1 , middle of the board), means that unit is ON. It is NOT a fault condition.
On mains power fault or battery low conditions the unit will recover itself without any further operation on it.
In the evenience that the mains power fault has generated further problems to the unit (Eg. on board fuse) or that the backup battery is not working anymore , the maintenance is needed.

16 DEFECTS POSSIBLE SOLUTION

DEFECT FOUND	POSSIBLE CAUSE	POSSIBLE SOLUTION
Small fog flow coming out from nozzle	All products are 100% and a small ammount of liquid could be still in the warming unit	This condition is normal and can happen on first installation, it will completely disappear in a while when the unit will become completely hot.
	Check power input DC12v	Verify the output from power supply (see paragrph 14)
RED Led ON (Error)	Too low battery level or exaust	Replace Battery
	Bag in Reserve or Empty	Replace fluid Bag
	No Mains power	Check mains power or F4 fuse
RED Led ON (Fault)	Disturbance / interference or potential differences between devices	In the evenience of high noise on mains power (lightings) an error while reading thermocouple values can occur. Execute recovery (Paragraph 16). If even recovery fails the unit may be faulty
		In very large installations or with more than one fog units connected to the same alarm panel, a mains power difference can occur, in that evenience the units have to be decoupled
	Error in the thermal loop	Error on thermocouple, fuse cable, resistor. Please refer to technical service
	Heater Temperature too high or thermocouple error	Switch off the unit and verify the screw on J8 connector
	Poor ventilation	Switch off the unit and clean air holes

DEFECT FOUND	POSSIBLE CAUSE	POSSIBLE SOLUTION
Unit ARMED (BLUE LED ON) but don't execute trig command	Red front led ON	Bag changed ,reset needed Follow instructions Paragraph 13
		Empty bag- replace it following instructions on Paragraph 13
	Green front led is OFF	Unit still warming , wait max 120min. with the unit connected to the mains power
	Wires error	Verifify on J10 that when alarm is ON there is a contact beetween - GND(6) + TRIG(8)
	Mains power overload	Try the Recover procedure(Paragraph 16) With no results replace the board
	Electronic Board overheath	Clean air flow holes (Paragraph14)
Unit cannot be ARMED BLU LED OFF	Wires error	Verifify on J10 that when alarm is active there is a contact beetween - GND(6) + ARM(7)
While setting shooting time the green LED blinks quilckly	The W1 jumper is OPEN, unit in' "RESET" mode	Refer to bag Reset (Paragraph12) and shooting time setting (Paragraph 11) **Warning:** **please verify/set again the shooting time.**
		See time setting (Paragraph 11)

17 WARRANTY

The warranty of UR Fog is two years and is handled directly from the dealer or authorized installer, so please contact your supplier to take advantage of warranty with the copy of the purchase document that contains the serial number of the machine. Not included in the warranty: moving parts and/or damages depending on the incorrect use unless it is found a manufacturing defect in origin. Liquid and bags are not covered by warranty.

BY BREAKING THE SECURITY LABELS AND THE OPENING OF THE MACHINE
YOU WILL ACCEPT WHAT IS WRITTEN ON THIS MANUAL AND
ON THE WEB SITE: **www.urfog.com**

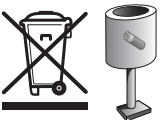

We recommend to throw away the batteries in the appropriate waste containers for recycling. Heavy metals contained in them are recyclable.

UR Fog srl: Via Toscana n. 38 - 10099 San Mauro Torinese - Italy
Phone +39 011/01.33.037 - Fax 011/01.33.005
support@urfog.com

Legal office: Via Giacinto Collegno 11 - 10143 - Torino - Italy

RESELLER/INSTALLER STAMP
(company to contact for the warranty)

Serial number _____

Date of installation _____

Signature of installer _____

At the end of the installation, write down the identification number of the machines, the date of the installation and sign in the dedicated spaces.

DATE	BATTERY EXCHANGE		BAG EXCHANGE		SIGNATURE
	YES	NO	YES	NO	
	YES	NO	YES	NO	
	YES	NO	YES	NO	
	YES	NO	YES	NO	
	YES	NO	YES	NO	
	YES	NO	YES	NO	
	YES	NO	YES	NO	
	YES	NO	YES	NO	
	YES	NO	YES	NO	
	YES	NO	YES	NO	
	YES	NO	YES	NO	
	YES	NO	YES	NO	
	YES	NO	YES	NO	
	YES	NO	YES	NO	
	YES	NO	YES	NO	
	YES	NO	YES	NO	
	YES	NO	YES	NO	

It is mandatory to fill out this table in accordance with the security rules

UR FOG
SECURITY FOGGING SYSTEMS

Notification of successful installation

Hereby informs that UR FOG machine, model .....
has been connected to the alarm system at:

Company Name	
Address	
Referent	E-mail address
Phone number	Mobile number

The fog machine generates a dense fog when an intrusion occurs to impede the visibility to the intruder.
The fog is safe for people, animals, things and food.
This notification has been sent or delivered to:

Firemen	
Referent	E-mail address
Phone number	Mobile number
Public security	
Referent	E-mail address
Phone number	Mobile number
Private security	
Referent	E-mail address
Phone number	Mobile number

FACSIMILE

AUTHORIZED INSTALLER: .....

PLACE: ..... DATE: .....

SIGNATURE AND STAMP: .....

UR FOG S.r.l. Sede legale / Legal Office : via Giacinto Collegno n°11 - 10143 Torino - Italy
Sede operativa e magazzini / Operation and delivery to : via Toscana n° 38 - 10099 San Mauro T.se (Torino) - Italy
C.F. / P. Iva 10724650010 - Reg. Imprese TO - 1157030 - Cap. Soc. Euro 10.000 int. versati
Tel. +39 011 0133037 - Fax +39 011 0133005 - e-mail : amministrazione@urfog.com

N.B. Ask for the PDF module writing to: support@urfog.com