Hanwha Vision

Network Dome

XNV-6020R

2M H.265 IR Dome Camera

Key Features

- Built-in 4mm fixed lens
- Max. 60fps@all resolutions (H.265/H.264)
- H.265, H.264, MJPEG codec, Multiple streaming
- Day & Night (ICR), WDR(150dB), Defog
- Loitering, Directional detection, Fog detection, Tampering
- Audio detection, Digital auto tracking, Sound classification
- Heatmap, People counting, Queue management
- Handover, microSD/SDHC/SDXC memory slot (Max. 512GB)
- Hallway view, WiseStream II support, IP67/IP66, IK10

Compatible Accessories (Optional)

SPB-VAN11

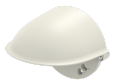

SBV-120WC

SBP-300CM

SBP-300PM

SBP-300KM

SBP-300WM1

SBP-300LM

SBP-137WM1

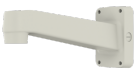

SBP-390WM2

SBP-300WM

SBP-300B

SBP-122HM

SBP-300NB

Design and specifications are subject to change without notice. The latest product information / specification can be found at HanwhaVision.com
Hanwha Vision is formerly known as Hanwha Techwin.

© Hanwha Vision CO., LTD. All rights reserved.

XNV-6020R

2M H.265 IR Dome Camera

Specifications

Video	
Imaging Device	1/2.8" 2MP CMOS
Resolution	1920x1080, 1280x1024, 1280x960, 1280x720, 1024x768, 800x600, 800x448, 720x576, 720x480, 640x480, 640x360, 320x240
Max. Framerate	H.265/H.264: Max. 60fps/50fps(60Hz/50Hz) MJPEG: Max. 30fps/25fps(60Hz/50Hz)
Min. Illumination	Color: 0.015Lux(F1.4, 1/30sec) BW: 0Lux(IR LED on)
Video Out	CVBS: 1.0 Vp-p / 75Ω composite, 720x480(N), 720x576(P) for installation USB: Micro USB Type B, 1280x720 for installation

Lens	
Focal Length (Zoom Ratio)	4mm fixed focal
Max. Aperture Ratio	F1.4
Angular Field of View	H: 88.6°, V: 47.5°, D: 104.8°
Min. Object Distance	0.4m(1.31ft)
Lens Type	Fixed

Pan / Tilt / Rotate	
Pan / Tilt / Rotate Range	0°~354° / 0°~67° / 0°~355°

Operational	
Camera Title	Displayed up to 85 characters
Day & Night	Auto(ICR)
Backlight Compensation	BLC, HLC, WDR, SSDR
Wide Dynamic Range	150dB
Digital Noise Reduction	SSNR V
Digital Image Stabilization	Support
Defog	Support
Motion Detection	8ea, 8point polygonal zones
Privacy Masking	32ea, polygonal zones - Color: Grey/Green/Red/Blue/Black/White - Mosaic
Gain Control	Low / Middle / High
White Balance	ATW / AWC / Manual / Indoor / Outdoor
LDC	Support
Electronic Shutter Speed	Minimum / Maximum / Anti flicker (2~1/12,000sec)
Video Rotation	Flip, Mirror, Hallway view(90°/270°)
Analytics	Defocus detection, Directional detection, Fog detection, Face detection, Motion detection, Digital auto tracking, Appear/Disappear, Enter/Exit, Loitering, Tampering, Virtual line, Audio detection, Sound classification

Design and specifications are subject to change without notice. The latest product information / specification can be found at HanwhaVision.com
Hanwha Vision is formerly known as Hanwha Techwin.

© Hanwha Vision CO., LTD. All rights reserved.

Business Intelligence	People counting, Queue management, Heatmap
Alarm I/O	Input 1ea / Output 1ea
Alarm Triggers	Analytics, Network disconnect, Alarm input
Alarm Events	File upload via FTP and e-mail Notification via e-mail SD/SDHC/SDXC or NAS recording at event triggers Alarm output DPTZ preset
Audio In	Selectable(mic in/line in) Supply voltage: 2.5VDC(4mA), Input impedance: 2K Ohm
Audio Out	Line out, Max.output level: 1Vrms
IR Viewable Length	30m(98.42ft)

Network	
Ethernet	RJ-45(10/100BASE-T)
Video Compression	H.265/H.264: Main/Baseline/High, MJPEG
Audio Compression	G.711 u-law /G.726 Selectable G.726(ADPCM) 8KHz, G.711 8KHz G.726: 16Kbps, 24Kbps, 32Kbps, 40Kbps AAC-LC: 48Kbps at 16KHz
Smart Codec	Manual(5ea area), WiseStream II
Bitrate Control	H.264/H.265: CBR or VBR MJPEG: VBR
Streaming	Unicast(20 users) / Multicast Multiple streaming(Up to 10 profiles)
Protocol	IPv4, IPv6, TCP/IP, UDP/IP, RTP(UDP), RTP(TCP), RTCP,RTSP, NTP, HTTP, HTTPS, SSL/TLS, DHCP, FTP, SMTP, ICMP, IGMP, SNMPv1/v2c/v3(MIB-2), ARP, DNS, DDNS, QoS, PIM-SM, UPnP, Bonjour, LLDP, SRTP
Security	HTTPS(SSL) Login Authentication Digest Login Authentication IP Address Filtering User access log 802.1X Authentication(EAP-TLS, EAP-LEAP)
Application Programming Interface	ONVIF Profile S/G/T SUNAPI(HTTP API) Wisenet open platform

General	
Web Viewer	Supported OS: Windows 7, 8.1, 10, Mac OS X 10.10, 10.11, 10.12 Recommended Browser: Google Chrome Supported Browser: MS Explore11, MS Edge, Mozilla Firefox(Window 64bit only), Apple Safari(Mac OS X only)
Edge Storage	Micro SD/SDHC/SDXC 2slot 512GB
Memory	1024MB RAM, 256MB Flash

Environmental & Electrical	
Operating Temperature / Humidity	-30°C~+55°C(-22°F ~ +131°F) / Less than 90% RH * Start up should be done at above -20°C
Storage Temperature / Humidity	-50°C ~ +60°C (-58°F ~ +140°F) / Less than 90% RH
Certification	IP66/IP67, IK10
Input Voltage	PoE(IEEE802.3af, Class3), 12VDC
Power Consumption	PoE : Max 9W 12VDC : Max. 8W

Mechanical	
Color / Material	Ivory / Aluminum
Product Dimensions / Weight	Ø120x97.5mm(4.72"x3.84"), 615g(1.36 lb)

Design and specifications are subject to change without notice. The latest product information / specification can be found at HanwhaVision.com
Hanwha Vision is formerly known as Hanwha Techwin.

© Hanwha Vision CO., LTD. All rights reserved.

XNV-6020R

2M H.265 IR Dome Camera

CAD

Unit:mm [inch]

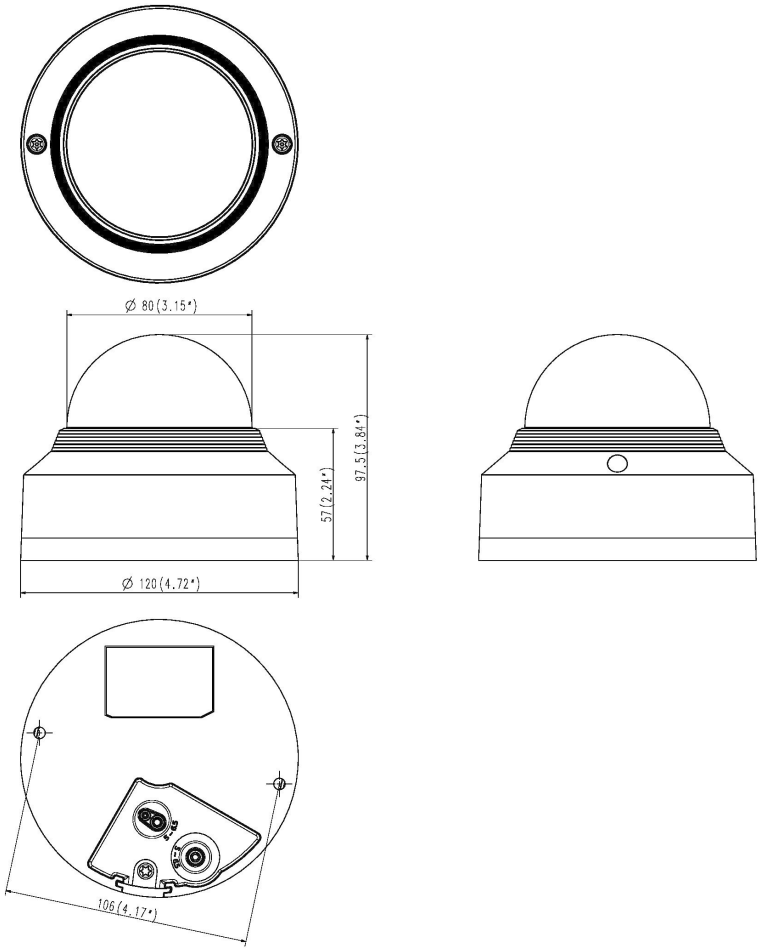

Design and specifications are subject to change without notice. The latest product information / specification can be found at HanwhaVision.com
Hanwha Vision is formerly known as Hanwha Techwin.

© Hanwha Vision CO., LTD. All rights reserved.