Network | Dome

PNV-A9081R

4K AI IR Vandal Dome Camera

Key Features

- Maximum 4K resolution
- 0.05Lux@F1.6 (Color), 0Lux (B/W, IR LED on)
- Day & Night(ICR), WDR(120dB),WiseNR II (Using AI engine), Prefer Shutter
- H.265, H.264, MJPEG codec, WiseStream II , WiseStreamIII (Using AI engine)
- Video Analytics based on AI
  - Object detection and classification(Person, Face, Vehicle, License Plate)
  - Face mask detection, Social distancing detection
  - Attribute, BestShot
- Modular structure for easy installation
- Requires camera firmware v1.41.03 or later to use Face Mask Detection
- System requirements
  - SSM v2.10.8 or later, Genetec plugin v1.0 or later, Milestone plugin v1.0.2 or later, NVR model (XRN-6410DB4/B4, XRN-3210B4)

Compatible Accessories (Optional)

SBC-180B

SBP-300LMW

SBP-300WMW1

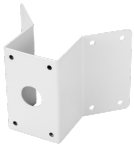

SBP-300KMW

SBP-300BW

SBP-300PMW

Occupancy Monitoring Application

SBP-300WMW

AI Plug-in

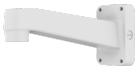

SBP-390WMW2

SPB-VAN85W

SBP-300NBW

SBP-300CMW

SBP-187HMW

Design and specifications are subject to change without notice. The latest product information / specification can be found at HanwhaVision.com.
Hanwha Vision is formerly known as Hanwha Techwin.

© Hanwha Vision CO., LTD. All rights reserved.

PNV-A9081R

4K AI IR Vandal Dome Camera

Specifications

Video	
Imaging Device	1/1.8" CMOS
Resolution	3840x2160, 3072x1728, 2592x1944, 2688x1520, 2560x1440, 2048x1536, 1920x1080, 1600x1200, 1280x1024,1280x960, 1280x720, 1024x768, 800 x 600, 800 x 448, 720 x 576, 720x480, 640x480, 640x360
Max. Framerate	H.265/H.264: Max. 30fps/25fps(60Hz/50Hz) MJPEG: Max. 30fps/25fps(60Hz/50Hz)
Min. Illumination	Color: 0.05Lux(F1.6, 1/30sec) BW: 0.005Lux(F1.6, 1/30sec), 0Lux(IR LED on)
Video Out	CVBS: 1.0 Vp-p / 75Ω composite, 720x480(N), 720x576(P) for installation USB: Micro USB Type B, 1280x720 for installation

Lens	
Focal Length (Zoom Ratio)	4.5~10mm(2.2x) motorized varifocal
Max. Aperture Ratio	F1.6(Wide)~F2.65(Tele)
Angular Field of View	H:101.4°(Wide)~45.5°(Tele) / V:53.6°(Wide)~25.5°(Tele) / D:120.7°(Wide)~52.3°(Tele)
Min. Object Distance	0.5m(1.64ft)
Focus Control	Simple focus
Lens Type	P iris

Pan / Tilt / Rotate	
Pan / Tilt / Rotate Range	0-~360- / -45-~85- / 0-~355-

Operational	
Camera Title	Displayed up to 85 characters
Day & Night	Auto(ICR)
Backlight Compensation	BLC, WDR, SSDR
Digital Noise Reduction	WiseNR II (using AI engine) SSNR V
Digital Image Stabilization	Stabilization Support(built-in gyro sensor)
Motion Detection	8ea, polygonal zones
Privacy Masking	6ea, rectangle zones - Color: GrayBlack/White
Gain Control	Low / Middle / High
White Balance	ATW / AWC / Manual / Indoor / Outdoor
LDC	Support
Electronic Shutter Speed	Minimum / Maximum / Anti flicker (1/5~1/12,000sec) Auto prefer shutter control based on AI engine
Video Rotation	Flip, Mirror, Hallway view(90-/270-)

Design and specifications are subject to change without notice. The latest product information / specification can be found at HanwhaVision.com.
Hanwha Vision is formerly known as Hanwha Techwin.

© Hanwha Vision CO., LTD. All rights reserved.

Analytics	Classified object type: Person/Face/Vehicle/License plate Attributes: Person(Gender, Color and Bag), Face(Age, Gender, Mask and Glasses), Vehicle(Type: car/bus/truck/motorcycle/bicycle and Color) Support BestShot per object Analytics events based on AI engine - Object detection, Virtual line*(Crossing/Direction), Virtual area*(Loitering/Intrusion/Enter/Exit), Face mask detection, Social distancing detection, Slip&Fall detection Analytics events - Defocus detection, Motion detection, Tampering, Audio detection, Sound classification, Shock detection, Virtual area(Appear/Disappear) Support WiseDetector for Adding custom objects *Some of the video analytics only works with people and vehicle detection
Business Intelligence	People/Vehicle/Crowd counting, Queue management, Heatmap based on AI engine
Alarm I/O	2 configurable I/O ports, DC 12V output(Max. 50mA)
Alarm Triggers	Analytics, Network disconnect, Alarm input, App event, Time schedule, MQTT subscription
Alarm Events	When alarm trigger occurred - File upload(image): e-mail/FTP - Notification: e-mail - Recording: SD/SDHC/SDXC or NAS recording at event triggers - Alarm output - Handover: PTZ preset, send message by HTTP/HTTPS/TCP - Audio clip playback - MQTT: publication
Audio In	Selectable(mic in/line in)
Audio Out	Line out
Light Type	IR LED (850nm)
IR Viewable Length	WiseIR 30m(98.42ft)

Network	
Ethernet	Metal shielded RJ-45(10/100/1000 BASE-T)
Video Compression	H.265/H.264: Main/High, MJPEG
Audio Compression	G.711 u-law /G.726 Selectable G.726(ADPCM) 8KHz, G.711 8KHz G.726: 16Kbps, 24Kbps, 32Kbps, 40Kbps AAC-LC: 48Kbps at 16KHz
Smart Codec	Manual(5ea area), WiseStream II , WiseStreamIII(using AI engine)
Video Quality Adjustment	H.264/H.265: Target bitrate level control MJPEG: Target bitrate level control
Bitrate Control	H.264/H.265: CBR or VBR MJPEG: VBR
Streaming	Unicast(6 users) / Multicast Multiple streaming(Up to 6 profiles)
Protocol	IPv4, IPv6, TCP/IP, UDP/IP, RTP(UDP), RTP(TCP), RTCP,RTSP, NTP, HTTP, HTTPS, SSL/TLS, DHCP, FTP, SMTP, ICMP, IGMP, SNMPv1/v2c/v3(MIB-2), ARP, DNS, DDNS, QoS, UPnP, Bonjour, LLDP, SRTP(TCP, UDP Unicast), MQTT
Application Programming Interface	ONVIF Profile S/G/T/M SUNAPI(HTTP API) Hanwha Vision Open Platform WiseAI application included Oncloud edge recording, compatible with Hanwha Vision's Micro SD cards up to 1TB

Security	
OS / Firmware Protect	Encrypted Firmware, Secure boot, Signed Firmware
User authentication	Digest Authenticaton, Prevent brute-force attack
Network authentication	IEEE 802.1X (EAP-TLS, EAP-LEAP, EAP-PEAP, MSCHAPv2)
Secure Communication	HTTPS, WSS (WebSocket Secure)
Access Control	IP-based access control
Data Protect	Encryption Credentials, Encrypt compress for live recording file
Audit	Access / System / Event Log management

Design and specifications are subject to change without notice. The latest product information / specification can be found at HanwhaVision.com.
Hanwha Vision is formerly known as Hanwha Techwin.

© Hanwha Vision CO., LTD. All rights reserved.

Device ID	Device certificate (Hanwha Techwin Root CA)
Secure Storage	SDcard partition encrypt

General	
Webpage Language	English, French, German, Spanish, Italian, Chinese, Korean, Russian, Japanese, Swedish, Portuguese, Czech, Polish, Turkish, Dutch, Hungarian, Greek
Edge Storage	Micro SD/SDHC/SDXC 2slots 512GB
Memory	4096MB RAM, 512MB Flash

Environmental & Electrical	
Operating Temperature / Humidity	-50°C ~ +55°C(-58°F ~ +131°F) / Less than 90% RH * Start up should be done at above -30°C
Storage Temperature / Humidity	-50°C ~ +60°C(-58°F ~ +140°F) / Less than 90% RH
Certification	IP66/IP67/IP6K9K, IK10+, NEMA4X
Input Voltage	PoE+(IEEE802.3at), 12VDC
Power Consumption	PoE+: Max 20.00W, typical 17.00W 12VDC: Max 18.70W, typical 15.00W

Mechanical	
Color / Material	White / Aluminum, Hard-coated dome bubble
RAL Code	RAL9003
Product Dimensions / Weight	Ø180x125mm(7.09x4.92"), Weight : 1.90Kg (4.19lb)
Compatible Conduit hole / Gangbox	3/4"(M25) Single, Double, 4"Octagon, Square
Hanging Mount (Dome)	SBP-187HMW
Skin Cover (Dome)	SBC-180B(Black), SPB-VAN85W(Smoke dome cover)

DORI (EN62676-4 standard)	
Detect (25PPM/ 8PPF)	Wide: 62.2m(204.04ft) / Tele: 185.4m(608.31ft)
Observe (63PPM/ 19PPF)	Wide: 24.9m(81.62ft) / Tele: 74.2m(243.32ft)
Recognize (125PPM/ 38PPF)	Wide: 12.4m(40.81ft) / Tele: 37.1m(121.66ft)
Identify (250PPM/ 76PPF)	Wide: 6.2m(20.40ft) / Tele: 18.5m(60.83ft)

Design and specifications are subject to change without notice. The latest product information / specification can be found at HanwhaVision.com.
Hanwha Vision is formerly known as Hanwha Techwin.

© Hanwha Vision CO., LTD. All rights reserved.

PNV-A9081R

4K AI IR Vandal Dome Camera

CAD

Unit:mm [inch]

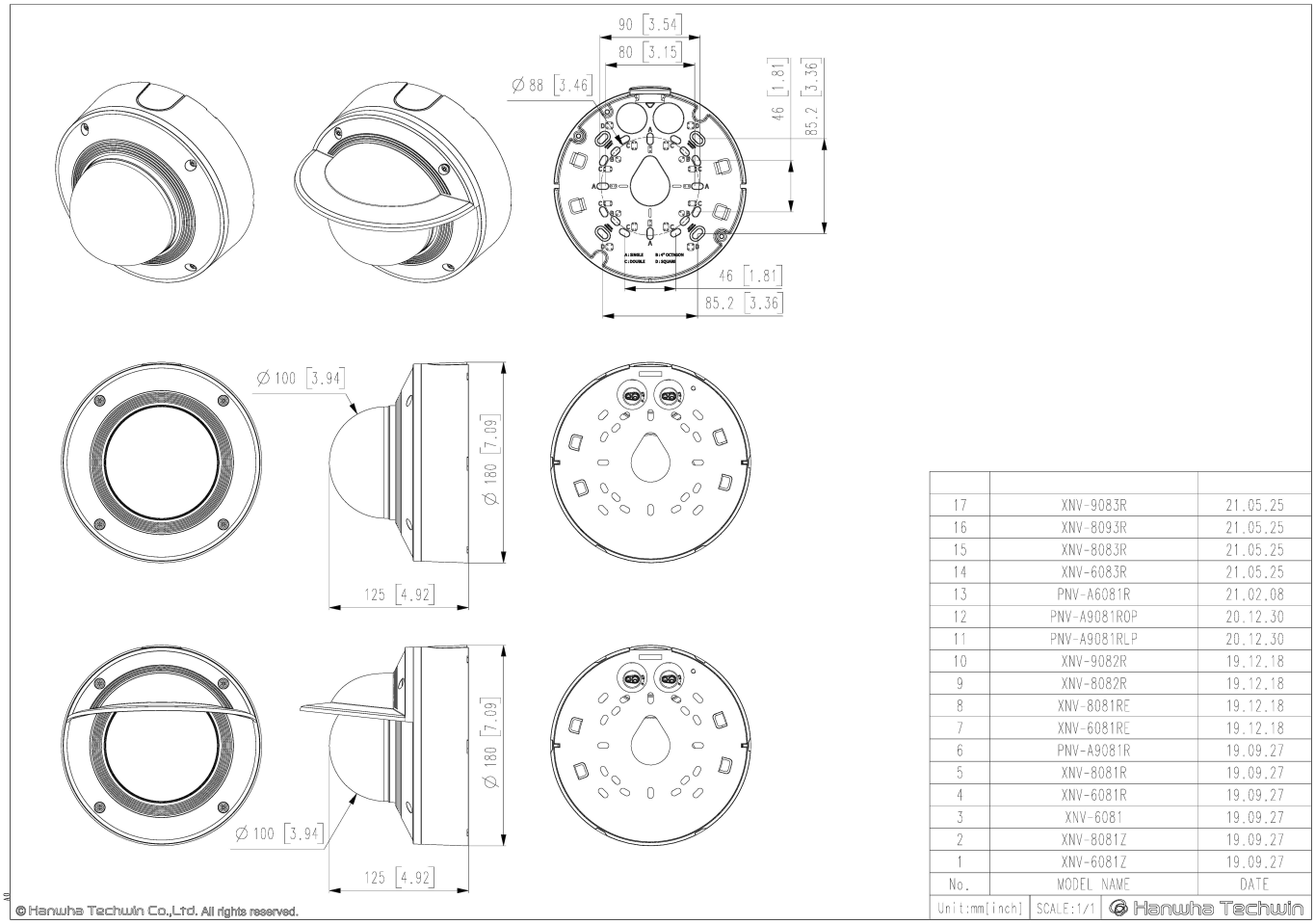

17	XNV-9083R	21.05.25
16	XNV-8093R	21.05.25
15	XNV-8083R	21.05.25
14	XNV-6083R	21.05.25
13	PNV-A6081R	21.02.08
12	PNV-A9081ROP	20.12.30
11	PNV-A9081RLP	20.12.30
10	XNV-9082R	19.12.18
9	XNV-8082R	19.12.18
8	XNV-8081RE	19.12.18
7	XNV-6081RE	19.12.18
6	PNV-A9081R	19.09.27
5	XNV-8081R	19.09.27
4	XNV-6081R	19.09.27
3	XNV-6081	19.09.27
2	XNV-8081Z	19.09.27
1	XNV-6081Z	19.09.27
No.	MODEL NAME	DATE
Unit:mm[inch]	SCALE:1/1	Hanwha Techwin

Design and specifications are subject to change without notice. The latest product information / specification can be found at HanwhaVision.com.
Hanwha Vision is formerly known as Hanwha Techwin.

© Hanwha Vision CO., LTD. All rights reserved.