Hanwha Vision

Network | Dome

QNV-7082R

4MP IR Vandal Dome Camera

Key Features

- Max. 4MP resolution
- Color : 0.1Lux (F1.6, 1/30sec), B/W : 0Lux (IR LED On)
- 3.2 ~ 10mm (3.1x) motorized varifocal
- IR viewable length: 30m (98.42ft)
- Day&Night (ICR), WDR (120dB)
- H.265, H.264, MJPEG, Multiple streaming supported
- Motion detection, Tampering, Defocus detection
- Hallway view (90°/270°), LDC support
- Micro SD/SDHC/SDXC memory 1 slot (Max. 128GB)
- IP66, IK10

Compatible Accessories (Optional)

SBP-137WMW1

SBP-300BW

SBP-300CMW

SBP-300KMW

SBP-300LMW

SBP-300NBW

SBP-300PMW

SBP-300WMW

SBP-300WMW1

SBP-301HMW2

SBV-136BW

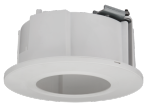

SHD-1408FW

SPB-VAW72

Design and specifications are subject to change without notice. The latest product information / specification can be found at HanwhaVision.com.
Hanwha Vision is formerly known as Hanwha Techwin.

© Hanwha Vision CO., LTD. All rights reserved.

QNV-7082R

4MP IR Vandal Dome Camera

Specifications

Video	
Imaging Device	1/3" CMOS
Resolution	2560x1440, 1920x1080, 1280x960, 1280x720, 800x600, 800x448, 720x576, 720x480, 640x480, 640x360, 320x240
Max. Framerate	H.265/H.264: Max. 30fps/25fps(60Hz/50Hz) MJPEG: Max. 15fps (@4MP Max. 2fps)
Min. Illumination	Color : 0.1Lux (F1.6, 1/30sec) B/W : 0Lux (IR LED On)
Video Out	CVBS: 1.0 Vp-p / 75Ω composite, 720x480(N), 720x576(P) for installation

Lens	
Focal Length (Zoom Ratio)	3.2~10mm(3.1x) motorized varifocal
Max. Aperture Ratio	F1.6(Wide) ~ F2.9(Tele)
Angular Field of View	H: 99°(Wide) ~ 30°(Tele), V: 53°(Wide) ~ 17°(Tele), D: 116°(Wide) ~ 35°(Tele)
Focus Control	Simple focus
Lens Type	DC auto iris

Pan / Tilt / Rotate	
Pan / Tilt / Rotate Range	0°~350° / 0°~67° / 0°~355°

Operational	
Camera Title	Displayed up to 85 characters
Day & Night	Auto(ICR)
Backlight Compensation	BLC, WDR, SSDR
Wide Dynamic Range	120dB
Digital Noise Reduction	SSNR
Motion Detection	4ea, polygonal zones
Privacy Masking	6ea, rectangular zones
Gain Control	Low / Middle / High
White Balance	ATW / AWC / Manual / Indoor / Outdoor
LDC	Support
Electronic Shutter Speed	Minimum/Maximum/Anti flicker (1/5~1/12,000sec)
Video Rotation	Flip, Mirror, Hallway view(90°/270°)
Analytics	Motion detection, Tampering, Defocus detection , Virtual area(Intrusion/Enter/Exit), Virtual line(Crossing/Direction)
Alarm I/O	Input 1ea / Output 1ea
Alarm Triggers	Analytics, Network disconnect, Alarm input

Design and specifications are subject to change without notice. The latest product information / specification can be found at HanwhaVision.com.
Hanwha Vision is formerly known as Hanwha Techwin.

© Hanwha Vision CO., LTD. All rights reserved.

Alarm Events	File upload via FTP and e-mail Notification via e-mail SD/SDHC/SDXC or NAS recording at event triggers Alarm output Handover(PTZ preset)
Audio In	Selectable(mic in/line in)
Light Type	IR LED (850nm)
Light Viewable Length	30m(98.42ft)

Network	
Ethernet	RJ-45 (10/100BASE-T)
Video Compression	H.265/H.264 : Main/High, MJPEG
Audio Compression	G.711 u-law /G.726 Selectable G.726(ADPCM) 8KHz, G.711 8KHz G.726: 16Kbps, 24Kbps, 32Kbps, 40Kbps
Smart Codec	Manual (5ea area), WiseStream II
Video Quality Adjustment	H.264/H.265: Target bitrate level control MJPEG: Quality level control
Bitrate Control	H.264/H.265: CBR or VBR MJPEG: VBR
Streaming	Unicast(6 users) / Multicast Multiple streaming(Up to 3 profiles)
Protocol	IPv4, IPv6, TCP/IP, UDP/IP, RTP(UDP), RTP(TCP), RTCP, RTSP, NTP, HTTP, HTTPS, SSL/TLS, DHCP, PPPoE, FTP, SMTP, ICMP, IGMP, SNMPv1/v2c/v3(MIB-2), ARP, DNS, DDNS, QoS, PIM-SM, UPnP, Bonjour, LLDP
Application Programming Interface	ONVIF Profile S/G/T, SUNAPI (HTTP API)

Security	
OS / Firmware Protect	Encrypted firmware
User authentication	Digest Authentication, Prevent brute-force attack
Network authentication	802.1X Authentication(EAP-TLS, EAP-LEAP, EAP-PEAP MSCHAPv2)
Secure Communication	HTTPS, SRTP, WSS(Websocket secure)
Access Control	Access control based on IP address
Data Protect	Authentication information encryption, ZIP compression encryption
Audit	User Access/System/Event log management
Device ID	Device Certificate(Hanwha Private Root CA)
Secure Storage	SDcard partition encrypt

General	
Webpage Language	English, Korean, Chinese, French, Italian, Spanish, German, Japanese, Russian, Portuguese, Czech, Polish, Turkish, Dutch, Hungarian, Greek
Edge Storage	Micro SD/SDHC/SDXC 1slot 128GB
Memory	512MB RAM, 256MB Flash

Environmental & Electrical	
Operating Temperature / Humidity	-40°C~+55°C (-40°F ~ +131°F) / 0~95% RH ＊Start up should be done at -30°C or above
Storage Temperature / Humidity	-40°C~+60°C (-40°F~+140°F) / 0~95% RH
Certification	IP66, IK10, NEMA4X
Input Voltage	PoE(IEEE802.3af, Class3), 12VDC
Power Consumption	PoE: Max 11.4W, typical 8.5W 12VDC: Max 9.6W, typical 7.2W

Mechanical

Design and specifications are subject to change without notice. The latest product information / specification can be found at HanwhaVision.com.
Hanwha Vision is formerly known as Hanwha Techwin.

© Hanwha Vision CO., LTD. All rights reserved.

Color / Material	White / Aluminum
RAL Code	RAL9003
Product Dimensions / Weight	ø137.0x106.1mm (ø5.39x4.18"), 710g(1.57 lb)
Compatible Conduit hole / Gangbox	3/4"(M25) Single, Double, 4"Octagon
Hanging Mount (Dome)	SBP-301HMW2
Skin Cover (Dome)	SPB-VAW72 (White)
Backbox	SBV-136BW

DORI (EN62676-4 standard)	
Detect (25PPM/ 8PPF)	Wide: 27m(89.86ft) / Tele: 129m(422.61ft)
Observe (63PPM/ 19PPF)	Wide: 11m(35.95ft) / Tele: 52m(169.04ft)
Recognize (125PPM/ 38PPF)	Wide: 6m(17.97ft) / Tele: 26m(84.52ft)
Identify (250PPM/ 76PPF)	Wide: 3m(8.99ft) / Tele: 13m(42.26ft)

Design and specifications are subject to change without notice. The latest product information / specification can be found at HanwhaVision.com.
Hanwha Vision is formerly known as Hanwha Techwin.

© Hanwha Vision CO., LTD. All rights reserved.

QNV-7082R

4MP IR Vandal Dome Camera

CAD

Unit:mm [inch]

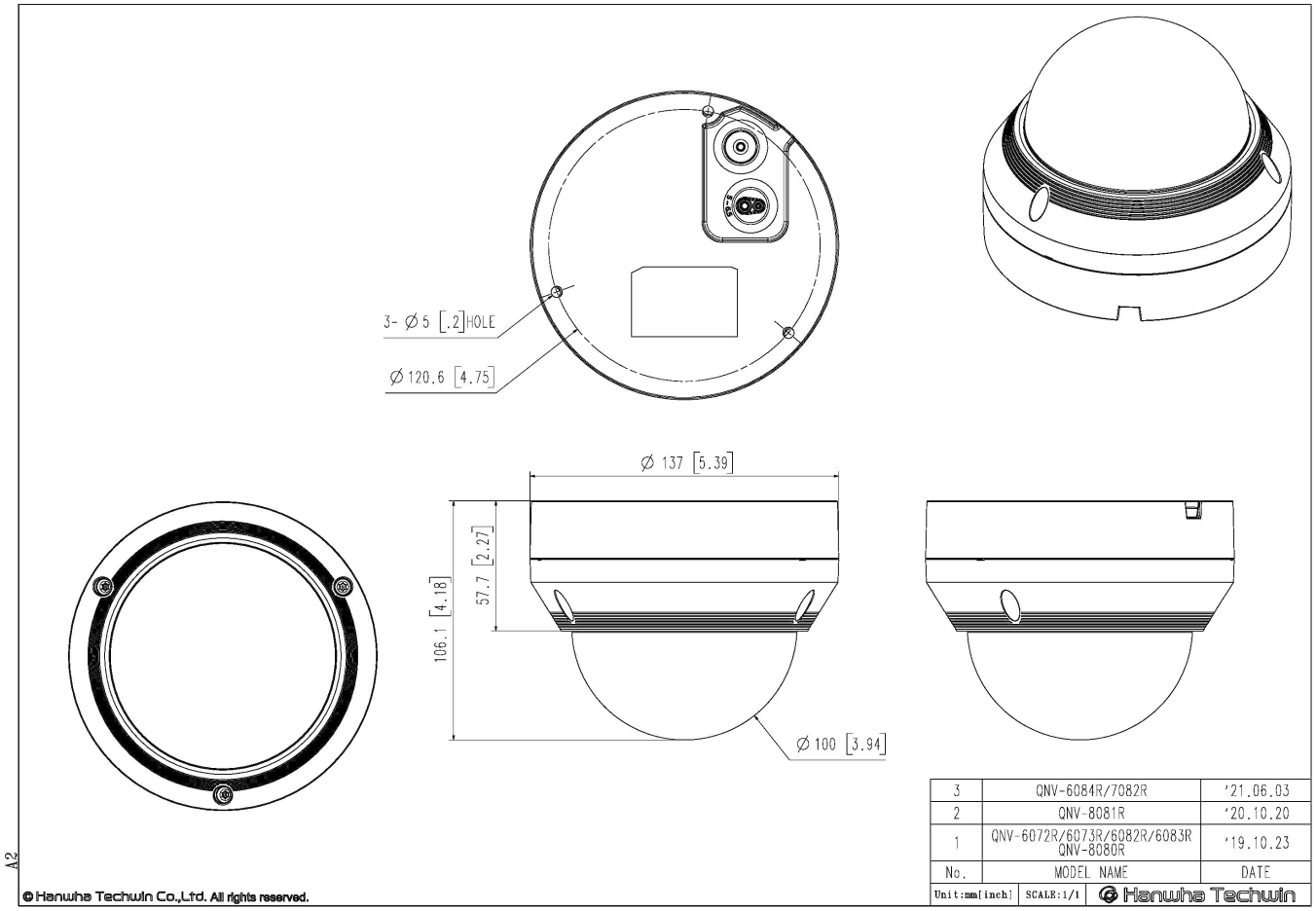

Design and specifications are subject to change without notice. The latest product information / specification can be found at HanwhaVision.com.
Hanwha Vision is formerly known as Hanwha Techwin.

© Hanwha Vision CO., LTD. All rights reserved.