Hanwha Vision

Network Bullet

XNO-C6083R

2MP AI IR Bullet Camera

Key Features

- 2MP resolution
- 2.8~12mm (4.3x) motorized varifocal
- Color: 0.011Lux (F1.4, 1/30sec, 30IRE), 0Lux (IR LED on)
- Maximum 60fps@2MP (H.265/H.264)
- WiseIR: IR viewable length 40m (131.23ft)
- Day & Night (ICR), extremeWDR (150dB)
- H.265, H.264, MJPEG, WiseStream II , WiseStream III (Using AI engine)
- DIS with built-in Gyro sensor
- Analytics events based on AI engine (NPU) : Object detection (Person/Face/Vehicle - car, truck, bus, bicycle, motorcycle/License plate), IVA (Virtual line/Area, Enter/Exit, Loitering, Direction, Intrusion)
- Analytics events : Defocus detection, Motion detection, Tampering, Fog detection Audio detection, Sound classification, Shock detection, Appear/Disappear
- IP66, IP67, NEMA4X, IK10

Compatible Devices

SBP-160HMW1

SBP-150CMI

SBP-300CMI

SBP-300CMW1

SBP-900CMW

SBP-300CMTW

SBP-300CMTS

SBP-300WMW

SBP-300WMW1

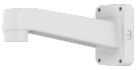

SBP-390WMW2

SBP-160WMW1

SBD-180PMW

SBP-300PMW2

SBP-300LMW

Design and specifications are subject to change without notice. The latest product information / specification can be found at HanwhaVision.com.
Hanwha Vision is formerly known as Hanwha Techwin.

© Hanwha Vision CO., LTD. All rights reserved.

XNO-C6083R

2MP AI IR Bullet Camera

Specifications

Video	
Imaging Device	1/2.8" CMOS
Resolution	1920x1080, 1280x1024, 1280x960, 1280x720, 1024x768, 800x600, 800x448, 720x576, 720x480, 640x480, 640x360, 320x240
Max. Framerate	H.265/H.264: Max. 60fps/50fps(60Hz/50Hz) MJPEG: Max. 30fps
Min. Illumination	Color: 0.01Lux(F1.4, 1/30sec, 30IRE) B/W: 0.001Lux(F1.4, 1/30sec, 30IRE), 0Lux(IR LED on), 30/25fps Color: 0.02Lux(F1.4, 1/60sec, 30IRE) BW: 0.002Lux(F1.4, 1/60sec, 30IRE), 0Lux(IR LED on), 60/50fps
Video Out	USB: Micro USB Type B, 1280x720 for installation

Lens	
Focal Length (Zoom Ratio)	2.8~12mm(4.3x) motorized varifocal
Max. Aperture Ratio	F1.4(Wide)~F3.6(Tele)
Angular Field of View	H: 120°(Wide)~27°(Tele) V: 63°(Wide)~15°(Tele) D: 143°(Wide)~32°(Tele)
Min. Object Distance	0.5m(1.64ft)
Focus Control	Simple focus, Manual
Lens Type	DC auto iris with hall sensor(IR corrected)

Pan / Tilt / Rotate	
Pan / Tilt / Rotate Range	0°~360° / 0°~90° / 0°~360°

Operational	
Camera Title	Displayed up to 85 characters
Day & Night	Auto(ICR)
Backlight Compensation	BLC, HLC, WDR, SSDR
Wide Dynamic Range	extremeWDR(150dB)
Digital Noise Reduction	WiseNR II (Based on AI engine), SSNR V
Digital Image Stabilization	Support(built-in gyro sensor)
Defog	Support
Motion Detection	8ea, 8point Polygonal zones
Privacy Masking	32ea, 4point Quadrangle zones - Color: Gray/Green/Red/Blue/Black/White - Mosaic
Gain Control	Off / Max Gain / Manual
White Balance	ATW / NarrowATW / AWC / Manual / Indoor / Outdoor
LDC	Support(Fill/stretch mode)
Electronic Shutter Speed	Minimum / Maximum / Anti flicker(2~1/12,000sec) prefer shutter control(Based on AI engine)

Design and specifications are subject to change without notice. The latest product information / specification can be found at HanwhaVision.com.
Hanwha Vision is formerly known as Hanwha Techwin.

© Hanwha Vision CO., LTD. All rights reserved.

Digital PTZ	Support(Preset, Group)
Video Rotation	Flip, Mirror, Hallway view(90°/270°)
Analytics	Classified object type: Person/Face/Vehicle(Type: car/bus/truck/motorcycle/bicycle)/License plate Attributes: Vehicle(Type: car/bus/truck/motorcycle/bicycle) Support DetectionShot Analytics events based on AI engine - Object detection, Virtual line(Crossing/Direction), Virtual area(Loitering/Intrusion/Enter/Exit), Motion detection Analytics events - Defocus detection, Tampering, Fog detection, Audio detection, Sound classification, Shock detection, Virtual area(Appear/Disappear)
Business Intelligence	Based on AI engine: People/Vehicle counting, Queue management, Heatmap
Alarm I/O	2 configurable I/O ports
Alarm Triggers	Analytics, Network disconnect, Alarm input, App event, Time schedule, MQTT subscription
Alarm Events	When alarm trigger occurred - File upload(image): e-mail/FTP/SFTP - File upload(video clip): FTP/SFTP - Notification: e-mail - Recording: SD/SDHC/SDXC or NAS recording at event triggers - Alarm output - Handover: PTZ preset, send message by HTTP/HTTPS/TCP - Audio clip playback - MQTT: publication
Audio In	Selectable(mic in/line in)
Audio Out	Line out
IR Viewable Length	WiseIR 40m(131.23ft)

Network	
Ethernet	Metal shielded RJ-45(10/100BASE-T)
Video Compression	H.265/H.264: Main/Baseline/High, MJPEG
Audio Compression	G.711 u-law /G.726 Selectable G.726(ADPCM) 8KHz, G.711 8KHz G.726: 16Kbps, 24Kbps, 32Kbps, 40Kbps AAC-LC: 48Kbps at 16KHz
Smart Codec	Manual(5ea area), WiseStreamIII(Based on AI engine)
Video Quality Adjustment	H.264/H.265: Target bitrate level control MJPEG: Target bitrate level control
Bitrate Control	H.264/H.265: CBR or VBR MJPEG: VBR
Streaming	Unicast(20 users) / Multicast Multiple streaming(Up to 10 profiles, 3 virtual channel support)
Protocol	IPv4, IPv6, TCP/IP, UDP/IP, RTP(UDP), RTP(TCP), RTCP, RTSP, NTP, HTTP, HTTPS, SSL/TLS, DHCP, FTP/SFTP, SMTP, ICMP, IGMP, SNMPv1/v2c/v3(MIB-2), ARP, DNS, DDNS, QoS, UPnP, Bonjour, LLDP, CDP, SRTP(TCP, UDP Unicast), MQTT
Application Programming Interface	ONVIF Profile S/G/T/M SUNAPI(HTTP API) Hanwha Vision open platform

Security	
OS / Firmware Protect	Encrypted Firmware, Secure boot, Signed Firmware
User authentication	Digest Authenticaton, Prevent brute-force attacks
Network authentication	IEEE 802.1X(EAP-TLS, EAP-LEAP, EAP-PEAP, MSCHAPv2)
Secure Communication	HTTPS, WSS(WebSocket Secure), SRTP
Access Control	IP-based access control
Data Protect	Encryption Credentials, Encrypt compress for live recording file export
Audit	Access / System / Event Log management
Device ID	Device certificate(Hanwha Vision Root CA)
Secure Storage	HTPM(Hanwha trusted platform module), SDcard partition encrypt

Design and specifications are subject to change without notice. The latest product information / specification can be found at HanwhaVision.com.
Hanwha Vision is formerly known as Hanwha Techwin.

© Hanwha Vision CO., LTD. All rights reserved.

Security Certificate	CyberSecurity assuarance program UL CAP(UL 2900-2-3 L2)

General	
Webpage Language	English, Korean, Chinese, French, Italian, Spanish, German, Japanese, Russian, Portuguese, Czech, Polish, Turkish, Dutch, Hungarian, Greek
Edge Storage	Micro SD/SDHC/SDXC 1slot Max. 512GB
Edge Storage(OnCloud)	Micro SD/SDHC/SDXC 1slot Max. 1TB * Hanwha Vision branded microSD cards have been certified and recommended for OnCloud edge recording.
Memory	2GB RAM, 512MB Flash

Environmental & Electrical	
Operating Temperature / Humidity	-40°C~+55°C(-40°F~+131°F) * Start up should be done at above -20°C 0~100%RH(condensing) Humidity control with AIR vent
Storage Temperature / Humidity	-50°C~+60°C(-58°F~+140°F) / 0~90% RH
EPA(Effective Projected Area)	0.02㎡
Certification	IP66/IP67, NEMA4X, IK10
Input Voltage	PoE(IEEE802.3af, Class3), 12VDC
Power Consumption	PoE: Max 12.95W, typical 10.8W 12VDC: Max 12.5W, typical 10.0W

Mechanical	
Color / Material	White / Aluminum Window: Hard-coated window
RAL Code	RAL9003
Product Dimensions / Weight	ø93.4x276.6mm(ø3.68x10.89"), 1640g(3.62 lb)
Compatible Conduit hole / Gangbox	single, double, 4" octagon, 4" square
Hanging Mount (Dome)	SBP-160HMW1
Backbox	Included
Ceiling Mount (Assy)	SBP-150CMI/300CMI, SBP-300CMW1/900CMW, SBP-300CMTW, SBP-300CMTS
Wall Mount	SBP-300WMW/WMW1, SBP-390WMW2, SBP-160WMW1
Pole Mount	SBD-180PMW, SBP-300PMW2
Parapet Mount	SBP-300LMW, SBP-156LMW1
Corner Mount	SBP-300KMW1
Cabinet	SBP-300NBW
Conduit Adaptor	SBP-060BA

Certifications & Standards	
EMC	FCC 47 CFR 15 Subpart B Class A ICES-3(A)/NMB-3(A) CE/UKCA - EN 55032 Class A, EN 50130-4, EN 61000-3-2, EN 61000-3-3 VCCI CISPR 32 Class A RCM AS/NZS CISPR 32 Class A KS C 9832 Class A , KS C 9835
Safety	UL 62368-1, CAN/CSA C22.2 NO. 62368-1 IEC/EN 62471
Environment	IEC/EN 63000 IEC/EN 60529 IP66/IP67, IEC/EN 62262 IK10 NEMA 250 type 4X

DORI (EN62676-4 standard)	
Detect (25PPM/ 8PPF)	Wide: 22.2m(72.74ft) / Tele: 159.9m(524.76ft)

Design and specifications are subject to change without notice. The latest product information / specification can be found at HanwhaVision.com.
Hanwha Vision is formerly known as Hanwha Techwin.

© Hanwha Vision CO., LTD. All rights reserved.

Observe (63PPM/ 19PPF)	Wide: 8.9m(29.09ft) / Tele: 64.0m(209.90ft)
Recognize (125PPM/ 38PPF)	Wide: 4.4m(14.55ft) / Tele: 32.0m(104.95ft)
Identify (250PPM/ 76PPF)	Wide: 2.2m(7.27ft) / Tele: 16.0m(52.48ft)

Design and specifications are subject to change without notice. The latest product information / specification can be found at HanwhaVision.com.
Hanwha Vision is formerly known as Hanwha Techwin.
© Hanwha Vision CO., LTD. All rights reserved.

XNO-C6083R

2MP AI IR Bullet Camera

CAD

Unit:mm [inch]

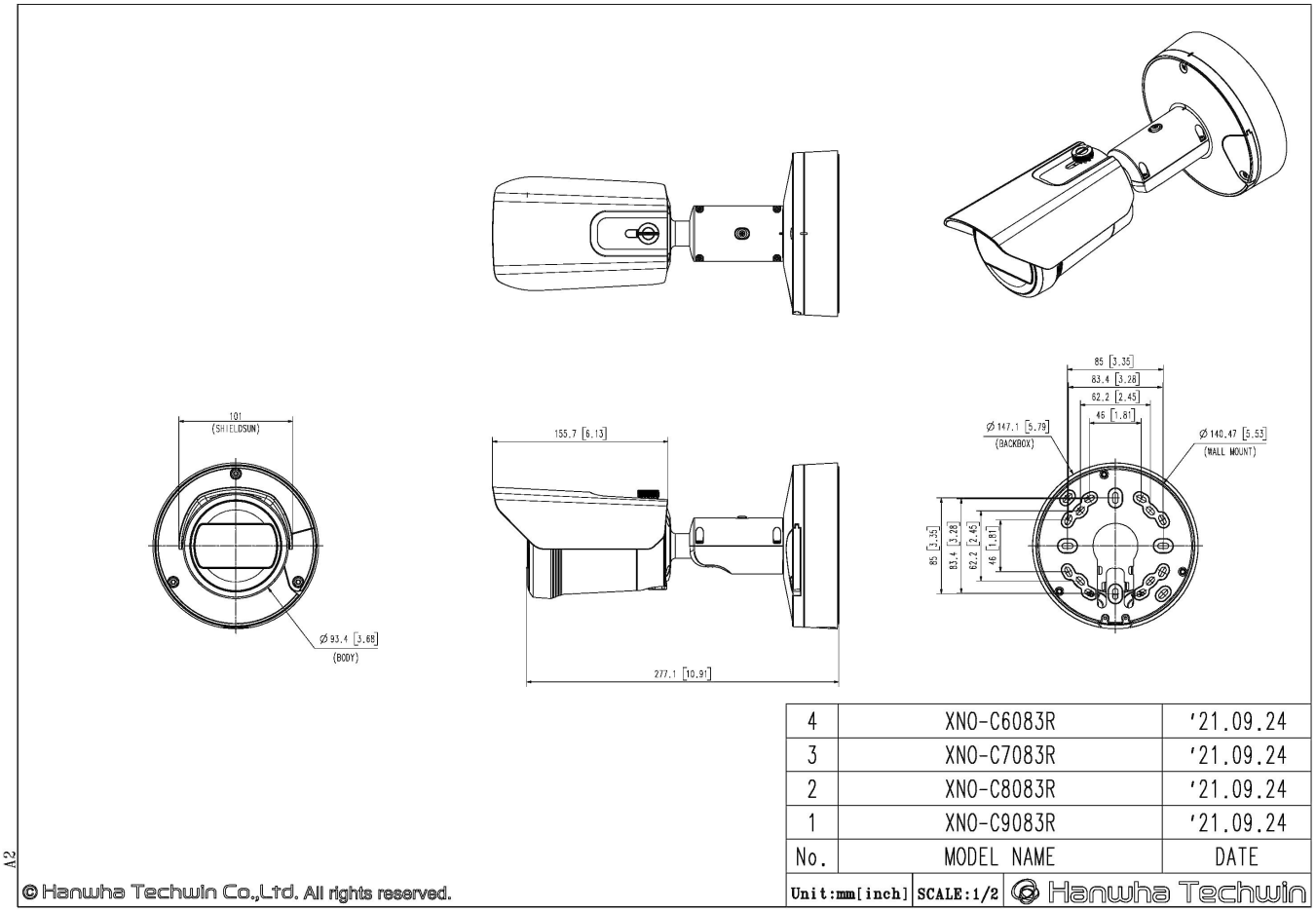

No.	MODEL NAME	DATE
4	XNO-C6083R	'21.09.24
3	XNO-C7083R	'21.09.24
2	XNO-C8083R	'21.09.24
1	XNO-C9083R	'21.09.24

Design and specifications are subject to change without notice. The latest product information / specification can be found at HanwhaVision.com.
Hanwha Vision is formerly known as Hanwha Techwin.

© Hanwha Vision CO., LTD. All rights reserved.