Network Dome

XNV-8080RSA

5MP Stainless IR Dome Camera

Key Features

- Max. 5Megapixel (2560x1920) resolution
- 3.9 ~ 9.4mm (2.4x) motorized varifocal lens
- Max. 30fps@all resolutions (H.265 / H.264)
- H.265, H.264, MJPEG codec supported, Multiple streaming
- Day & Night (ICR), WDR (120dB), Defog
- Loitering, Directional detection, Tampering, Audio detection, Digital auto tracking, Fog detection, Sound classification
- Motion detection, Handover
- SD/SDHC/SDXC memory 2slots (Max. 512GB)
- Hallway view, WiseStream II support
- IR viewable length 50m
- IP66, IP6K9K, IK10+, NEMA4X
- LDC, PoE support

Compatible Accessories (Optional)

SBP-300HMS6

SBP-300WMS1

SBP-300WMS

SBP-300PMS

SBP-300KMS

Design and specifications are subject to change without notice. The latest product information / specification can be found at hanwha-security.com

ⓒ Hanwha Techwin Co., Ltd. All rights reserved. 06-2022

XNV-8080RSA

5MP Stainless IR Dome Camera

Specifications

Video

Imaging Device	1/1.8" CMOS
Resolution	2560x1920, 2560x1440, 1920x1080, 1600x1200, 1280x1024, 1280x960, 1280x720, 1024x768, 800x600, 800x448, 720x576, 720x480, 640x480, 640x360, 320x240
Max. Framerate	H.265/H.264: Max. 30fps/25fps(60Hz/50Hz) MJPEG: Max. 30fps/25fps(60Hz/50Hz)
Min. Illumination	Color: 0.07Lux(F1.3, 1/30sec) BW: 0Lux(IR LED on)
Video Out	CVBS: 1.0 Vp-p / 75Ω composite, 720x480(N), 720x576(P) for installation USB: Micro USB Type B, 1280x720 for installation

Lens

Focal Length (Zoom Ratio)	3.9~9.4mm(2.4x) motorized varifocal
Max. Aperture Ratio	F1.3(Wide) ~ F2.4(Tele)
Angular Field of View	H: 93°(Wide)~38°(Tele) V: 68°(Wide)~29°(Tele) D: 120°(Wide)~48°(Tele)
Min. Object Distance	0.5m(1.64ft)
Focus Control	Simple focus
Lens Type	DC Auto Iris, P iris

Pan / Tilt / Rotate

Pan / Tilt / Rotate Range	0~354 / 0~67 / 0~355

Operational

Camera Title	Displayed up to 85 characters
Day & Night	Auto(ICR)
Backlight Compensation	BLC, HLC, WDR
Wide Dynamic Range	120dB
Digital Noise Reduction	SSNR V
Digital Image Stabilization	Support
Defog	Support
Motion Detection	8ea, 8point Polygonal zones
Privacy Masking	32ea, 4point polygonal zones - Color : Gray, Green, Red, Blue, Black, White - Mosaic
Gain Control	Low / Middle / High
White Balance	ATW / AWC / Manual / Indoor / Outdoor
LDC	Support
Electronic Shutter Speed	Minimum / Maximum / Anti flicker (2~1/12,000sec)
Video Rotation	Flip, Mirror, Hallway view(90/270)
Analytics	Defocus detection, Directional detection, Fog detection, Face detection, Motion detection, Digital auto tracking, Appear/Disappear, Enter/Exit, Loitering, Tampering, Virtual line, Audio detection, Sound classification
Alarm I/O	Input 1ea / Output 1ea
Alarm Triggers	Analytics, Network disconnect, Alarm input

Design and specifications are subject to change without notice. The latest product information / specification can be found at hanwha-security.com
ⓒ Hanwha Techwin Co., Ltd. All rights reserved. 06-2022

Alarm Events	File upload via FTP and e-mail Notification via e-mail SD/SDHC/SDXC or NAS recording at event triggers Alarm output Handover
Audio In	Selectable(mic in/line in) Supply voltage: 2.5VDC(4mA), Input impedance: 2K Ohm
Audio Out	Line out, Max.output level: 1Vrms
IR Viewable Length	50m(164.04ft)

Network

Ethernet	RJ-45(10/100BASE-T)
Video Compression	H.265/H.264: Main/Baseline/High, MJPEG
Audio Compression	G.711 u-law /G.726 Selectable G.726(ADPCM) 8KHz, G.711 8KHz G.726: 16Kbps, 24Kbps, 32Kbps, 40Kbps AAC-LC: 48Kbps at 16KHz
Smart Codec	Manual(5ea area), WiseStream II
Bitrate Control	H.264/H.265: CBR or VBR MJPEG: VBR
Streaming	Unicast(20 users) / Multicast Multiple streaming(Up to 10 profiles)
Protocol	IPv4, IPv6, TCP/IP, UDP/IP, RTP(UDP), RTP(TCP), RTCP, RTSP, NTP, HTTP, HTTPS, SSL/TLS, DHCP, FTP, SMTP, ICMP, IGMP, SNMPv1/v2c/v3(MIB-2), ARP, DNS, DDNS, QoS, PIM-SM, UPnP, Bonjour
Security	HTTPS(SSL) Login Authentication Digest Login Authentication IP Address Filtering User access Log 802.1X Authentication(EAP-TLS, EAP-LEAP)
Application Programming Interface	ONVIF Profile S/G/T SUNAPI(HTTP API) Wisenet open platform

General

Webpage Language	English, Korean, Chinese, French, Italian, Spanish, German, Japanese, Russian, Swedish,, Portuguese, Czech, Polish, Turkish, Dutch, Greek, Hungarian
Edge Storage	Micro SD/SDHC/SDXC 2slot 512GB
Memory	1024MB RAM, 512MB Flash

Environmental & Electrical

Operating Temperature / Humidity	-40°C ~ +55°C(-40°F ~ +131°F) / Less than 90% RH
Storage Temperature / Humidity	-50°C ~ +60°C(-58°F ~ +140°F) / Less than 90% RH
Certification	IP66, IP6K9K, NEMA4X, IK10+
Input Voltage	PoE(IEEE802.3af), 12VDC, 24VAC
Power Consumption	PoE: Max 12.95W 12VDC: Max 11.5W 24VAC: Max 14W

Mechanical

Color / Material	Silver / Stainless(SUS316L)
Product Dimensions / Weight	Ø162x120.5mm(Ø6.38x4.74") / 2.8kg(6.17lb)

Certifications & Standards

EMC	FCC 47 CFR 15 Subpart B Class A ICES-3(A)/NMB-3(A) CE/UKCA - EN 55032 Class A, EN 50130-4 VCCI CISPR 32 Class A RCM AS/NZS CISPR 32 Class A KS C 9832 Class A , KS C 9835
Safety	UL 60950-1, CAN/CSA C22.2 NO. 60950-1 IEC/EN 62471

Design and specifications are subject to change without notice. The latest product information / specification can be found at hanwha-security.com
ⓒ Hanwha Techwin Co., Ltd. All rights reserved. 06-2022

Environment	IEC/EN 63000 IEC/EN 60529 IP66, ISO 20653 IP6K9K, IEC/EN 62262 IK10+ NEMA 250 type 4X NSF/ANSI 169-2016: Special purpose food equipment and devices

DORI (EN62676-4 standard)

Detect (25PPM/ 8PPF)	Wide: 48.6m(159.41ft) / Tele: 148.7m(487.85ft)
Observe (63PPM/ 19PPF)	Wide: 19.4m(63.76ft) / Tele: 59.5m(195.14ft)
Recognize (125PPM/ 38PPF)	Wide: 9.7m(31.88ft) / Tele: 29.7m(97.57ft)
Identify (250PPM/ 76PPF)	Wide: 4.9m(15.94ft) / Tele: 14.9m(48.78ft)

Design and specifications are subject to change without notice. The latest product information / specification can be found at hanwha-security.com
ⓒ Hanwha Techwin Co., Ltd. All rights reserved. 06-2022

XNV-8080RSA

5MP Stainless IR Dome Camera

CAD

Unit: mm [inch]

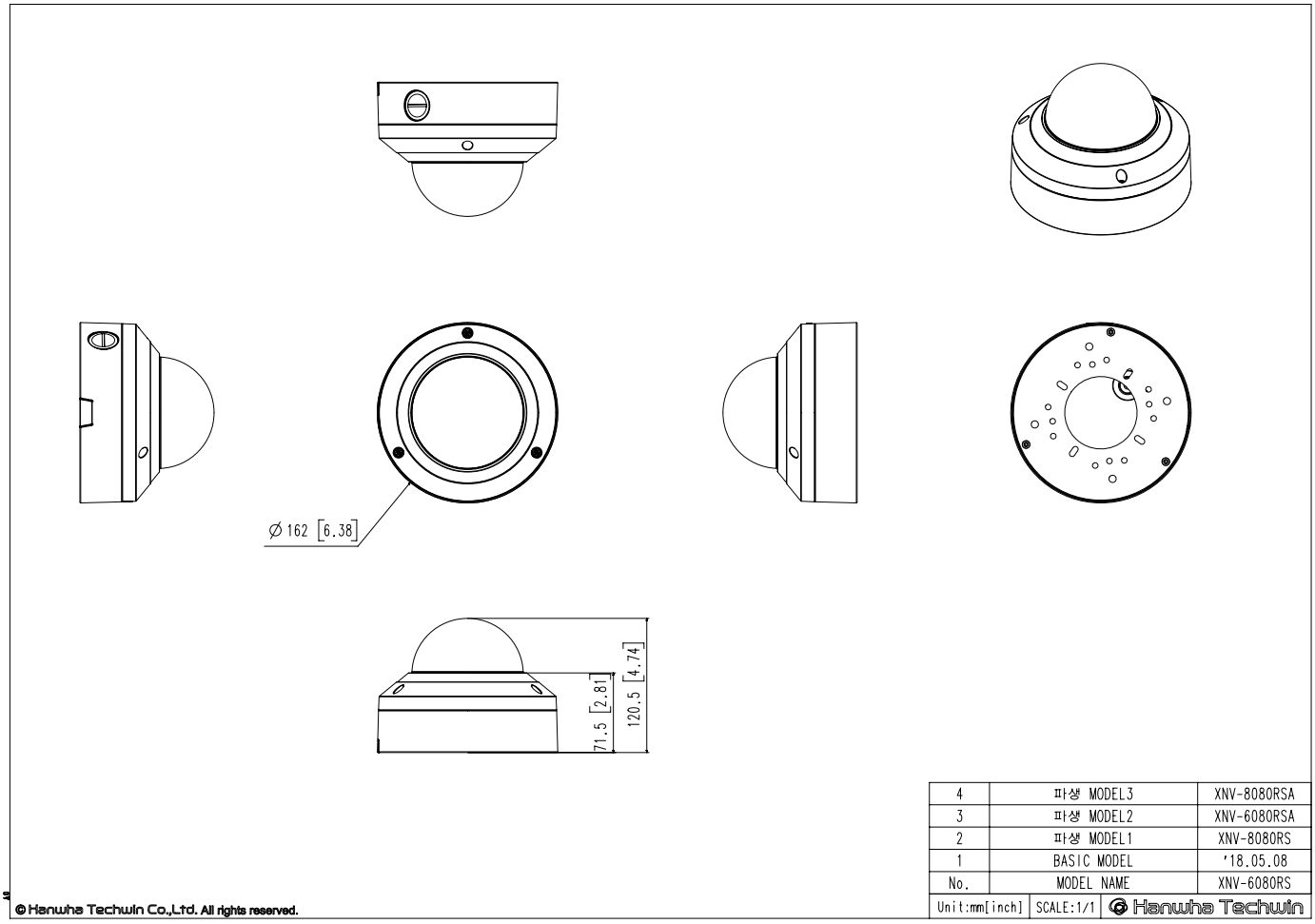

ⓒ Hanwha Techwin Co., Ltd. All rights reserved. 06-2022