Hanwha Vision

Network Dome

XNV-8083R

6MP AI IR Vandal Dome Camera

Key Features

- 6MP resolution
- 4.4~9.3mm (2.1x) motorized varifocal
- Color: 0.04 Lux (F1.3, 1/30sec, 30IRE), 0 Lux (IR LED on)
- Maximum 30 fps (H.265/H.264)
- WiseIR: IR viewable length 50m (164.04 ft)
- Day & Night (ICR), extremeWDR (120 dB)
- Hard-coated dome bubble
- WiseNR II (Based on AI engine), WiseStreamIII (Based on AI engine)
- Analytics events based on AI engine (NPU) : Object detection (Person/Face/Vehicle - car, truck, bus, bicycle, motorcycle/License plate), IVA (Virtual line/Area, Enter/Exit, Loitering, Direction, Intrusion)
- Analytics events : Defocus detection, Motion detection, Tampering, Fog detection Audio detection, Sound classification, Shock detection, Appear/Disappear
- IP66/IP67/IP6K9K, NEMA4X, IK10+

Compatible Accessories (Optional)

SBP-187HMW

SBP-180HMW1

SBV-180BW

SBV-180WW

SBP-150CMI

SBP-300CMI

SBP-300CMW1

SBP-900CMW

SBP-300CMTW

SBP-300CMTS

SBP-300WMW

SBP-300WMW1

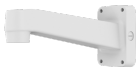

SBP-390WMW2

SBD-180PMW

Design and specifications are subject to change without notice. The latest product information / specification can be found at HanwhaVision.com.
Hanwha Vision is formerly known as Hanwha Techwin.

© Hanwha Vision CO., LTD. All rights reserved.

XNV-8083R

6MP AI IR Vandal Dome Camera

Specifications

Video	
Imaging Device	1/1.8" CMOS
Resolution	3328x1872, 3072x1728, 2592x1944, 2688x1520, 1920x1080, 1600x1200, 1280x1024, 1280x960, 1280x720, 1024x768, 800x600, 800x448, 720x576, 720x480, 640x480, 640x360, 320x240
Max. Framerate	H.265/H.264: Max. 30fps/25fps(60Hz/50Hz) MJPEG: Max. 30fps(@6MP Max. 5fps)
Min. Illumination	Color: 0.04Lux(F1.3, 1/30sec, 30IRE) BW: 0.004Lux(F1.3, 1/30sec, 30IRE), 0Lux(IR LED on)
Video Out	CVBS: 1.0 Vp-p / 75Ω composite, 720x480(N), 720x576(P) for installation USB: Micro USB Type B, 1280x720 for installation

Lens	
Focal Length (Zoom Ratio)	4.4~9.3mm(2.1x) motorized varifocal
Max. Aperture Ratio	F1.3(Wide)~F2.15(Tele)
Angular Field of View	H: 113°(Wide)~47°(Tele) V: 58°(Wide)~26°(Tele) D: 138°(Wide)~54°(Tele)
Min. Object Distance	0.5m(1.64ft)
Focus Control	Simple focus, Manual
Lens Type	P-iris(IR corrected)

Pan / Tilt / Rotate	
Pan / Tilt / Rotate Range	0°~360° / 0°~85° / 0°~355°

Operational	
Camera Title	Displayed up to 85 characters
Day & Night	Auto(ICR)
Backlight Compensation	BLC, HLC, WDR, SSDR
Wide Dynamic Range	extremeWDR(120dB)
Digital Noise Reduction	WiseNR II (Based on AI engine), SSNR V
Digital Image Stabilization	Support(built-in gyro sensor)
Defog	Support
Motion Detection	8ea, 8point Polygonal zones
Privacy Masking	32ea, 4point Quadrangle zones - Color: Gray/Green/Red/Blue/Black/White - Mosaic
Gain Control	Off / Max Gain / Manual
White Balance	ATW / NarrowATW / AWC / Manual / Indoor / Outdoor
LDC	Support(Fill/stretch mode)
Electronic Shutter Speed	Minimum / Maximum / Anti flicker(2~1/12,000sec) prefer shutter control(Based on AI engine)
Digital PTZ	Support(Preset, Group)

Design and specifications are subject to change without notice. The latest product information / specification can be found at HanwhaVision.com.
Hanwha Vision is formerly known as Hanwha Techwin.

© Hanwha Vision CO., LTD. All rights reserved.

Video Rotation	Flip, Mirror, Hallway view(90°/270°)
Analytics	Classified object type: Person/Face/Vehicle(Type: car/bus/truck/motorcycle/bicycle)/License plate Attributes: Vehicle(Type: car/bus/truck/motorcycle/bicycle) Support DetectionShot Analytics events based on AI engine - Object detection, Virtual line(Crossing/Direction), Virtual area(Loitering/Intrusion/Enter/Exit), Motion detection Analytics events - Defocus detection, Tampering, Fog detection, Audio detection, Sound classification, Shock detection, Virtual area(Appear/Disappear)
Business Intelligence	Based on AI engine: People/Vehicle counting, Queue management, Heatmap
Alarm I/O	2 configurable I/O ports, DC 12V output(Max. 50mA)
Alarm Triggers	Analytics, Network disconnect, Alarm input, App event, Time schedule, MQTT subscription
Alarm Events	When alarm trigger occurred - File upload(image): e-mail/FTP/SFTP - File upload(video clip): FTP/SFTP - Notification: e-mail - Recording: SD/SDHC/SDXC or NAS recording at event triggers - Alarm output - Handover: PTZ preset, send message by HTTP/HTTPS/TCP - Audio clip playback - MQTT: publication
Audio In	Selectable(mic in/line in)
Audio Out	Line out
IR Viewable Length	WiseIR 50m(164.04ft)

Network	
Ethernet	Metal shielded RJ-45(10/100/1000BASE-T)
Video Compression	H.265/H.264: Main/Baseline/High, MJPEG
Audio Compression	G.711 u-law /G.726 Selectable G.726(ADPCM) 8KHz, G.711 8KHz G.726: 16Kbps, 24Kbps, 32Kbps, 40Kbps AAC-LC: 48Kbps at 16KHz
Smart Codec	Manual(5ea area), WiseStreamIII(Based on AI engine)
Video Quality Adjustment	H.264/H.265: Target bitrate level control MJPEG: Target bitrate level control
Bitrate Control	H.264/H.265: CBR or VBR MJPEG: VBR
Streaming	Unicast(20 users) / Multicast Multiple streaming(Up to 10 profiles, 3 virtual channel support)
Protocol	IPv4, IPv6, TCP/IP, UDP/IP, RTP(UDP), RTP(TCP), RTCP, RTSP, NTP, HTTP, HTTPS, SSL/TLS, DHCP, FTP/SFTP, SMTP, ICMP, IGMP, SNMPv1/v2c/v3(MIB-2), ARP, DNS, DDNS, QoS, UPnP, Bonjour, LLDP, CDP, SRTP(TCP, UDP Unicast), MQTT
Application Programming Interface	ONVIF Profile S/G/T/M SUNAPI(HTTP API) Wisenet open platform

Security	
OS / Firmware Protect	Encrypted Firmware, Secure boot, Signed Firmware
User authentication	Digest Authenticaton, Prevent brute-force attacks
Network authentication	IEEE 802.1X(EAP-TLS, EAP-LEAP, EAP-PEAP, MSCHAPv2)
Secure Communication	HTTPS, WSS(WebSocket Secure), SRTP
Access Control	IP-based access control
Data Protect	Encryption Credentials, Encrypt compress for live recording file export
Audit	Access / System / Event Log management
Device ID	Device certificate(Hanwha Vision Root CA)
Secure Storage	TPM, HTPM(Hanwha trusted platform module), SDcard partition encrypt
Security Certificate	TPM with FIPS 140-2 level 2

Design and specifications are subject to change without notice. The latest product information / specification can be found at HanwhaVision.com.
Hanwha Vision is formerly known as Hanwha Techwin.

© Hanwha Vision CO., LTD. All rights reserved.

General	
Webpage Language	English, Korean, Chinese, French, Italian, Spanish, German, Japanese, Russian, Portuguese, Czech, Polish, Turkish, Dutch, Hungarian, Greek
Edge Storage	Micro SD/SDHC/SDXC 2slot Max. 1TB(512GBx2)
Memory	4GB RAM, 512MB Flash

Environmental & Electrical	
Operating Temperature / Humidity	-50°C~+60°C(-58°F~+140°F) * Start up should be done at above -30°C 0~100% RH(condensing) Humidity control with AIR vent
Storage Temperature / Humidity	-50°C~+60°C(-58°F~+140°F) / 0~90% RH
Certification	IP66/IP67/IP6K9K, NEMA4X, IK10+
Input Voltage	PoE+(IEEE802.3at type2, Class4), 12VDC
Power Consumption	PoE+: Max 22.5W, typical 17.9W 12VDC: Max 20.0W, typical 15.6W Power redundancy failover

Mechanical	
Color / Material	White / Aluminum Bubble: Hard-coated dome
RAL Code	RAL9003
Product Dimensions / Weight	ø180x125mm(ø7.09x4.92"), 1900g(4.19 lb)
Compatible Conduit hole / Gangbox	19.1mm(3/4")(M25) single, double, 4" octagon, 4" square
Hanging Mount (Dome)	SBP-180HMW1
Weather Cap (Dome)	Included
Backbox	SBV-180BW/WW
Ceiling Mount (Assy)	SBP-150CMI/300CMI, SBP-300CMW1/900CMW, SBP-300CMTW, SBP-300CMTS
Wall Mount	SBP-300WMW/WMW1, SBP-390WMW2
Pole Mount	SBD-180PMW, SBP-300PMW2
In-ceiling Mount	SHD-1350FPW
Parapet Mount	SBP-300LMW, SBP-156LMW1
Corner Mount	SBP-300KMW1
Cabinet	SBP-300NBW
Other Compatible Models	SPB-VAN85W

Certifications & Standards	
EMC	FCC 47 CFR 15 Subpart B Class A ICES-3(A)/NMB-3(A) CE/UKCA - EN 55032 Class A, EN 50130-4, EN 61000-3-2, EN 61000-3-3 VCCI CISPR 32 Class A RCM AS/NZS CISPR 32 Class A KS C 9832 Class A , KS C 9835
Safety	UL 62368-1, CAN/CSA C22.2 NO. 62368-1 IEC/EN 62471
Environment	IEC/EN 63000 IEC/EN 60529 IP66/IP67, ISO 20653 IP6K9K, IEC/EN 62262 IK10+ NEMA 250 type 4X

DORI (EN62676-4 standard)	
Detect (25PPM/ 8PPF)	Wide: 44.1m(144.54ft) / Tele: 153.1m(502.22ft)
Observe (63PPM/ 19PPF)	Wide: 17.6m(57.82ft) / Tele: 61.2m(200.89ft)
Recognize (125PPM/ 38PPF)	Wide: 8.8m(28.91ft) / Tele: 30.6m(100.44ft)

Design and specifications are subject to change without notice. The latest product information / specification can be found at HanwhaVision.com.
Hanwha Vision is formerly known as Hanwha Techwin.

© Hanwha Vision CO., LTD. All rights reserved.

Identify (250PPM/ 76PPF)	Wide: 4.4m(14.45ft) / Tele: 15.3m(50.22ft)

Design and specifications are subject to change without notice. The latest product information / specification can be found at HanwhaVision.com.
Hanwha Vision is formerly known as Hanwha Techwin.

© Hanwha Vision CO., LTD. All rights reserved.

XNV-8083R

6MP AI IR Vandal Dome Camera

CAD

Unit:mm [inch]

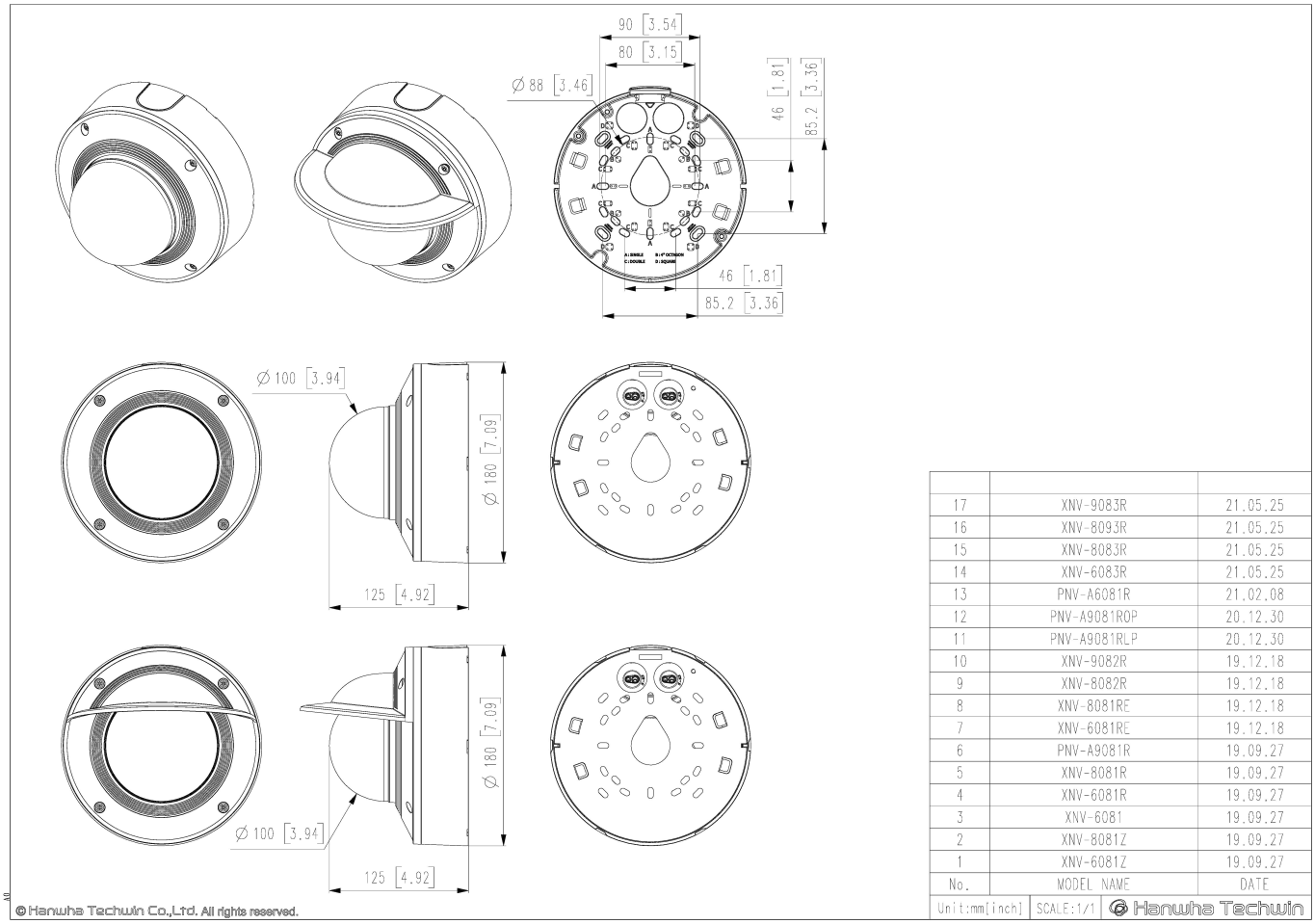

17	XNV-9083R	21.05.25
16	XNV-8093R	21.05.25
15	XNV-8083R	21.05.25
14	XNV-6083R	21.05.25
13	PNV-A6081R	21.02.08
12	PNV-A9081ROP	20.12.30
11	PNV-A9081RLP	20.12.30
10	XNV-9082R	19.12.18
9	XNV-8082R	19.12.18
8	XNV-8081RE	19.12.18
7	XNV-6081RE	19.12.18
6	PNV-A9081R	19.09.27
5	XNV-8081R	19.09.27
4	XNV-6081R	19.09.27
3	XNV-6081	19.09.27
2	XNV-8081Z	19.09.27
1	XNV-6081Z	19.09.27
No.	MODEL NAME	DATE
Unit:mm[inch]	SCALE:1/1	Hanwha Techwin

Design and specifications are subject to change without notice. The latest product information / specification can be found at HanwhaVision.com.
Hanwha Vision is formerly known as Hanwha Techwin.

© Hanwha Vision CO., LTD. All rights reserved.