Hanwha Vision

Network Dome

XNV-9082R

4K IR Vandal Dome Camera

Key Features

- 4K resolution
- 2.8~8.4mm(3x) motorized varifocal
- 0.05Lux@F1.2 (Color), 0Lux (B/W, IR LED on)
- Max.30fps@4K (H.265/H.264)
- IR viewable length 40m
- Day & Night (ICR), extreme WDR (120dB)
- DIS with built-in Gyro sensor
- Video Analytics
(Defocus, Directional detection, Audio detection, Shock detection, Face/Upper body detection)
- Dual SD slots (Max. 1TB)
- Modular structure, PoE support
- IP66/IP67/IP6K9K, IK10+, NEMA4X

Compatible Devices

SBC-180B

SBP-300LMW

SBP-300WMW1

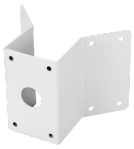

SBP-300KMW

SBP-300BW

SBP-300PMW

SBP-300WMW

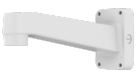

SBP-390WMW2

SPB-VAN85W

SBP-300NBW

SBP-300CMW

SBP-187HMW

SBP-180HMW1

SPC-100AC

Design and specifications are subject to change without notice. The latest product information / specification can be found at HanwhaVision.com.
Hanwha Vision is formerly known as Hanwha Techwin.

© Hanwha Vision CO., LTD. All rights reserved.

XNV-9082R

4K IR Vandal Dome Camera

Specifications

Video	
Imaging Device	1/2.8" CMOS
Resolution	3840x2160, 3328x1872, 3072x1728, 2592x1944, 2688x1520, 1920x1080, 1600x1200, 1280x1024, 1280x960, 1280x720, 1024x768, 800x600, 800x448, 720x576, 720x480, 640x480, 640x360, 320x240
Max. Framerate	H.265/H.264: Max. 30fps/25fps(60Hz/50Hz) MJPEG: Max. 30fps(@8MP Max. 5fps)
Min. Illumination	Color: 0.05Lux(F1.2, 1/30sec, 30IRE) BW: 0.005Lux(F1.2, 1/30sec, 30IRE), 0Lux(IR LED on)
Video Out	CVBS: 1.0 Vp-p / 75Ω composite, 720x480(N), 720x576(P) for installation USB: Micro USB Type B, 1280x720 for installation

Lens	
Focal Length (Zoom Ratio)	2.8~8.4mm(3x) motorized varifocal
Max. Aperture Ratio	F1.2(Wide)~F2.8(Tele)
Angular Field of View	H: 114°(Wide)~40°(Tele) V: 62°(Wide)~22°(Tele) D: 133°(Wide)~46°(Tele)
Min. Object Distance	0.7m(2.23ft)
Focus Control	Simple focus
Lens Type	DC Auto Iris, P iris

Pan / Tilt / Rotate	
Pan / Tilt / Rotate Range	0°~360° / 0°~85° / 0°~355°

Operational	
Camera Title	Displayed up to 85 characters
Day & Night	Auto(ICR)
Backlight Compensation	BLC, HLC, WDR, SSDR
Wide Dynamic Range	extremeWDR(120dB)
Digital Noise Reduction	SSNR V
Digital Image Stabilization	Support(built-in gyro sensor)
Defog	Support
Motion Detection	8ea, 8point Polygonal zones
Privacy Masking	32ea, 4point Quadrangle zones - Color: Gray/Green/Red/Blue/Black/White - Mosaic
Gain Control	Off / Max gain / Manual
White Balance	ATW / NarrowATW / AWC / Manual / Indoor / Outdoor
LDC	Support(Fill/stretch mode)
Electronic Shutter Speed	Minimum / Maximum / Anti flicker(2~1/12,000sec) Prefer shutter control
Digital PTZ	Support(Preset, Group)

Design and specifications are subject to change without notice. The latest product information / specification can be found at HanwhaVision.com.
Hanwha Vision is formerly known as Hanwha Techwin.

© Hanwha Vision CO., LTD. All rights reserved.

Video Rotation	Flip, Mirror, Hallway view(90°/270°)
Analytics	Analytics events - Defocus detection, Directional detection, Motion detection, Digital auto tracking, Appear/Disappear, Enter/Exit, Loitering, Tampering, Fog detection, Virtual line, Audio detection, Sound classification, Shock detection, Face/upper body detection
Business Intelligence	People counting, Queue management, Heatmap
Alarm I/O	2 configurable I/O ports
Alarm Triggers	Analytics, Network disconnect, Alarm input, App event, Time schedule, MQTT subscription
Alarm Events	When alarm trigger occurred - File upload(image): e-mail/FTP/SFTP - File upload(video clip): FTP/SFTP - Notification: e-mail - Recording: SD/SDHC/SDXC or NAS recording at event triggers - Alarm output - Handover: PTZ preset, send message by HTTP/HTTPS/TCP - Audio clip playback - MQTT: publication
Audio In	Selectable(mic in/line in)
Audio Out	Line out
IR Viewable Length	WiseIR 40m(131.23ft)

Network	
Ethernet	Metal shielded RJ-45(10/100/1000BASE-T)
Video Compression	H.265/H.264: Main/Baseline/High, MJPEG
Audio Compression	G.711 u-law /G.726 Selectable G.726(ADPCM) 8KHz, G.711 8KHz G.726: 16Kbps, 24Kbps, 32Kbps, 40Kbps AAC-LC: 48Kbps at 16KHz
Smart Codec	Manual(5ea area), WiseStream II
Video Quality Adjustment	H.264/H.265: Target bitrate level control MJPEG: Target bitrate level control
Bitrate Control	H.264/H.265: CBR or VBR MJPEG: VBR
Streaming	Unicast(20 users) / Multicast Multiple streaming(Up to 10 profiles, 3 virtual channel support)
Protocol	IPv4, IPv6, TCP/IP, UDP/IP, RTP(UDP), RTP(TCP), RTCP, RTSP, NTP, HTTP, HTTPS, SSL/TLS, DHCP, FTP/SFTP, SMTP, ICMP, IGMP, SNMPv1/v2c/v3(MIB-2), ARP, DNS, DDNS, QoS, UPnP, Bonjour, LLDP, CDP, SRTP(TCP, UDP Unicast), MQTT
Application Programming Interface	ONVIF Profile S/G/T SUNAPI(HTTP API) Hanwha Vision open platform

Security	
OS / Firmware Protect	Encrypted Firmware, Secure boot, Signed Firmware
User authentication	Digest Authenticaton, Prevent brute-force attacks
Network authentication	IEEE 802.1X(EAP-TLS, EAP-LEAP, EAP-PEAP, MSCHAPv2)
Secure Communication	HTTPS, WSS(WebSocket Secure), SRTP
Access Control	IP-based access control
Data Protect	Encryption Credentials, Encrypt compress for live recording file export
Audit	Access / System / Event Log management
Device ID	Device certificate(Hanwha Vision Root CA)
Secure Storage	HTPM(Hanwha trusted platform module), SDcard partition encrypt

General	
Webpage Language	English, Korean, Chinese, French, Italian, Spanish, German, Japanese, Russian, Portuguese, Czech, Polish, Turkish, Dutch, Hungarian, Greek
Edge Storage	Micro SD/SDHC/SDXC 2slot Max. 1TB(512GBx2)

Design and specifications are subject to change without notice. The latest product information / specification can be found at HanwhaVision.com.
Hanwha Vision is formerly known as Hanwha Techwin.

© Hanwha Vision CO., LTD. All rights reserved.

Edge Storage(OnCloud)	Micro SD/SDHC/SDXC 2slot Max. 2TB(1TBx2) * Hanwha Vision branded microSD cards have been certified and recommended for OnCloud edge recording.
Memory	4GB RAM, 512MB Flash

Environmental & Electrical	
Operating Temperature / Humidity	-50°C~+60°C(-58°F~+140°F) / 0~95% RH(non-condensing) * Start up should be done at above -30°C
Storage Temperature / Humidity	-50°C~+60°C(-58°F~+140°F) / 0~90% RH
Certification	IP66/IP67/IP6K9K, IK10+, NEMA4X
Input Voltage	PoE(IEEE802.3af, class3), 12VDC
Power Consumption	PoE: Max 12.95W, typical 10.7W 12VDC: Max 11.5W, typical 9.0W 24VAC: Max 13.5W, typical 11.0W Power redundancy failover

Mechanical	
Color / Material	White / Aluminum Bubble: Hard-coated dome
RAL Code	RAL9003
Product Dimensions / Weight	ø180x125mm(ø7.09x4.92"), 1900g(4.19 lb)
Compatible Conduit hole / Gangbox	19.1mm(3/4")(M25) single, double, 4" octagon, 4" square
Hanging Mount (Dome)	SBP-180HMW1
Skin Cover (Dome)	SBC-180B
Weather Cap (Dome)	Included
Power Module	SPC-100AC
Backbox	SBV-180BW, SBV-180WW
Ceiling Mount (Assy)	SBP-150CMI/300CMI, SBP-300CMW1/900CMW, SBP-300CMTW, SBP-300CMTS
Wall Mount	SBP-300WMW/WMW1, SBP-390WMW2
Pole Mount	SBD-180PMW, SBP-300PMW2
In-ceiling Mount	SHD-1350FPW
Parapet Mount	SBP-300LMW, SBP-156LMW1
Corner Mount	SBP-300KMW1
Cabinet	SBP-300NBW
Other Compatible Models	SPB-VAN85W

Certifications & Standards	
EMC	FCC 47 CFR 15 Subpart B Class A ICES-3(A)/NMB-3(A) CE/UKCA - EN 55032 Class A, EN 50130-4, EN 61000-3-2, EN 61000-3-3 VCCI CISPR 32 Class A RCM AS/NZS CISPR 32 Class A KS C 9832 Class A , KS C 9835
Safety	UL 60950-1, CAN/CSA C22.2 NO. 60950-1 IEC 62471
Environment	EN IEC 63000 IEC 60529 IP66/IP67, ISO 20653 IP6K9K, IEC 62262 IK10+ NEMA 250 type 4X

DORI (EN62676-4 standard)	
Detect (25PPM/ 8PPF)	Wide: 49.9m(163.63ft) / Tele: 211.0m(692.28ft)
Observe (63PPM/ 19PPF)	Wide: 19.9m(65.45ft) / Tele: 84.4m(276.91ft)
Recognize (125PPM/ 38PPF)	Wide: 10.0m(32.73ft) / Tele: 42.2m(138.46ft)

Design and specifications are subject to change without notice. The latest product information / specification can be found at HanwhaVision.com.
Hanwha Vision is formerly known as Hanwha Techwin.

© Hanwha Vision CO., LTD. All rights reserved.

Identify (250PPM/ 76PPF)	Wide: 5.0m(16.36ft) / Tele: 21.1m(69.23ft)

Design and specifications are subject to change without notice. The latest product information / specification can be found at HanwhaVision.com.
Hanwha Vision is formerly known as Hanwha Techwin.

© Hanwha Vision CO., LTD. All rights reserved.

XNV-9082R

4K IR Vandal Dome Camera

CAD

Unit:mm [inch]

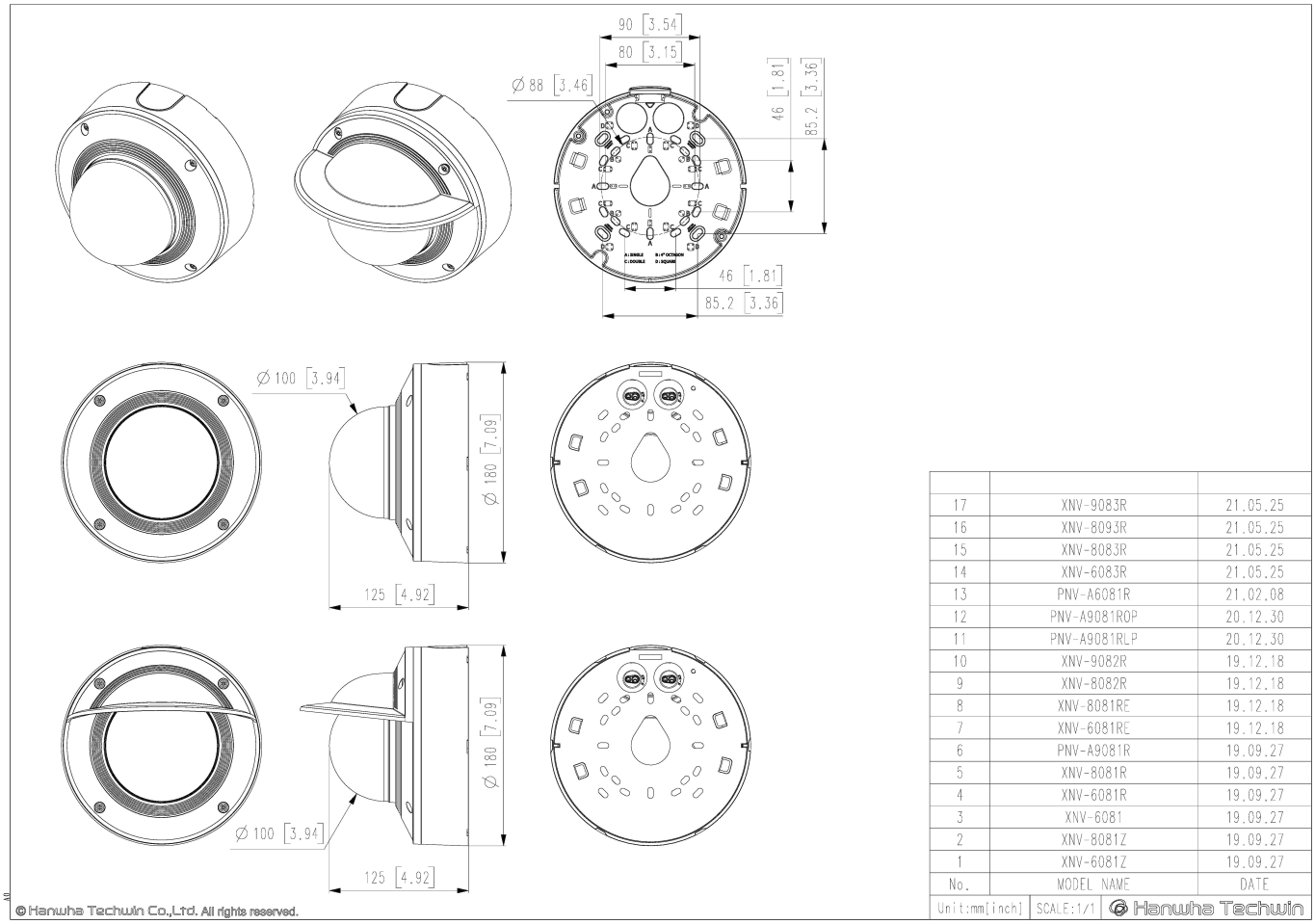

17	XNV-9083R	21.05.25
16	XNV-8093R	21.05.25
15	XNV-8083R	21.05.25
14	XNV-6083R	21.05.25
13	PNV-A6081R	21.02.08
12	PNV-A9081ROP	20.12.30
11	PNV-A9081RLP	20.12.30
10	XNV-9082R	19.12.18
9	XNV-8082R	19.12.18
8	XNV-8081RE	19.12.18
7	XNV-6081RE	19.12.18
6	PNV-A9081R	19.09.27
5	XNV-8081R	19.09.27
4	XNV-6081R	19.09.27
3	XNV-6081	19.09.27
2	XNV-8081Z	19.09.27
1	XNV-6081Z	19.09.27
No.	MODEL NAME	DATE
Unit:mm[inch]	SCALE:1/1	Hanwha Techwin

Design and specifications are subject to change without notice. The latest product information / specification can be found at HanwhaVision.com.
Hanwha Vision is formerly known as Hanwha Techwin.

© Hanwha Vision CO., LTD. All rights reserved.