People
PL8451V

COMELIT
FEEL · SECURE

FULL TECHNICAL MANUAL

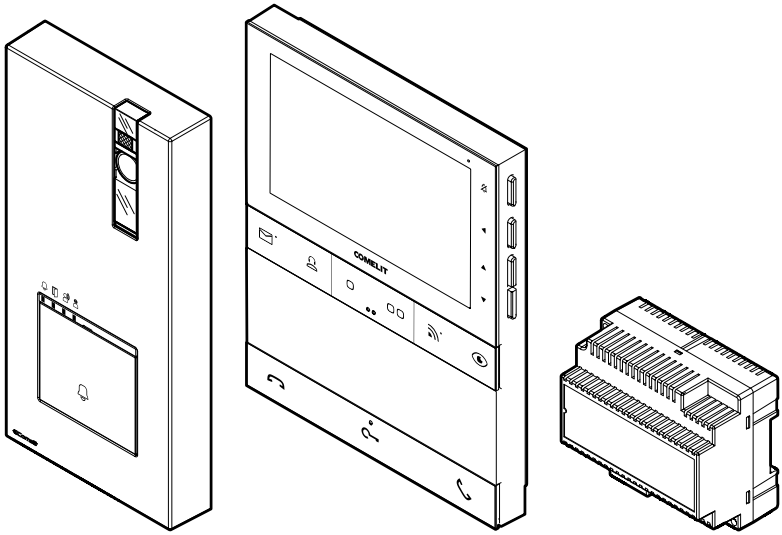

Join us in taking care of our planet

5” Wi-Fi Quadra and People kit with video memo art. PL8451V for Simplebus 2 system

Single-family kit with Wi-Fi door entry monitor for Simplebus 2 system.

The kit can be expanded up to 4 external entrance panels and up to 4 users, with 4 door entry monitors per user.

Can be installed in both residential and tertiary environments.

The kit is supplied programmed and ready to use.

The Comelit app, available to download free of charge from the Google and Apple stores, can be used to manage calls and the main door entry monitor functions directly via smartphone/tablet and Alexa/Ecoshow/ Google Assistant voice assistants, both remotely and on site.

Pairing the door entry monitor with the Comelit app is easy, quick and intuitive with the wizard.

It can also be used to enable the “Facial recognition” function directly from the app, to automatically - once a person has been recognised - send a lock-release command, trigger an actuator to control a light or additional opening and receive notification when a known individual makes a call.

The kit consists of 1 Quadra series outdoor entrance panel art. 4893M with call buttons for systems up to 4 calls, 1 People series hands-free Wi-Fi door entry monitor art. PL6741 and all the accessories required to create the system.

Think before you print

Help us to save the planet.
Think of the planet before printing this document.

and use the interactive links

You are reading an interactive document: *quickly access the content you are interested in via links.*

Table of contents

Kit art. PL8451V **4**
Notes for the installer 5

Art. 4893M **6**
Description 6
Technical specifications 8
Installation 9
Programming 12

Art. 1209 **19**
Description 19
Technical specifications 20

Art. PL6741 **21**
Description 21
Technical specifications 28
Programming the user code 30
Installation 34
Programming the door entry monitor 36

Operating distances **51**

Wiring diagrams **52**
System expansion diagrams 54
Using the entrance panel relay on generic actuator control 58
Variant with use of safety door lock 58

Table of user codes **59**

Warning **60**

Kit art. PL8451V

The kit components are supplied pre-programmed to work as a single-family setup.

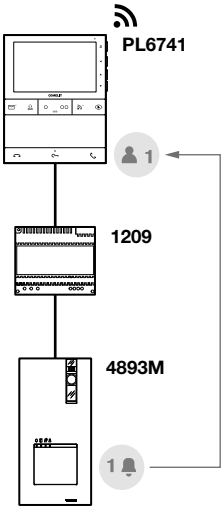

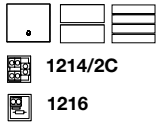

PROGRAMMING VIA MY COMELIT APP

The door entry monitor has an NFC connection which means it can be programmed quickly and easily via the MyComelit app, available to download free of charge.
Programming can even take place while the door entry monitor is off!

The door entry monitor can nevertheless be used to program the user code via dip-switch and customise programming using the menu.

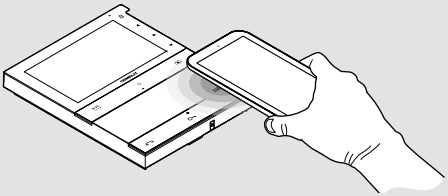

CALL FORWARDING ON SMARTPHONE VIA THE COMELIT APP

The Wi-Fi door entry monitor allows you to manage calls and the main door entry monitor functions directly via smartphone, both remotely and on site, using the ***Comelit app*** *(available to download free of charge from the Google and Apple stores).* ***Pairing the door entry monitor with the Comelit app is easy, quick and intuitive*** *with the wizard. For further information, please refer to the door entry monitor user manual.*

Notes for the installer

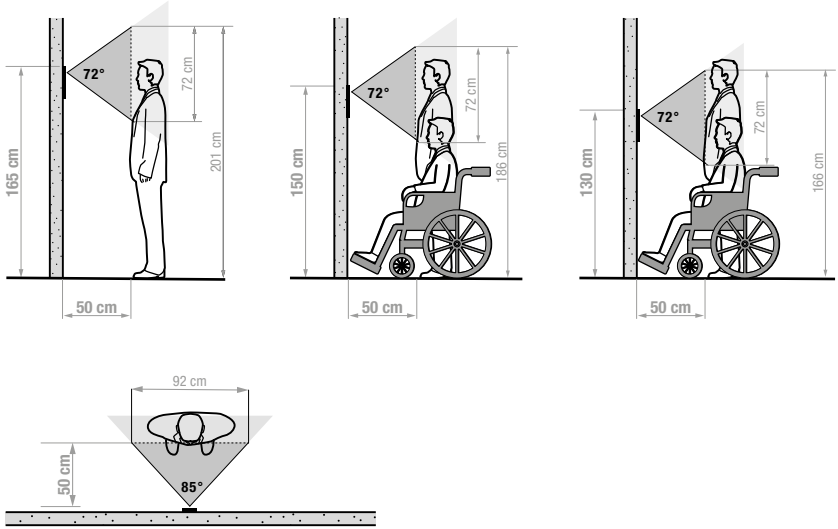

The camera must not be installed in front of light sources, or in places where the filmed subject is against the light. In dim environments, we recommend additional lighting is provided.

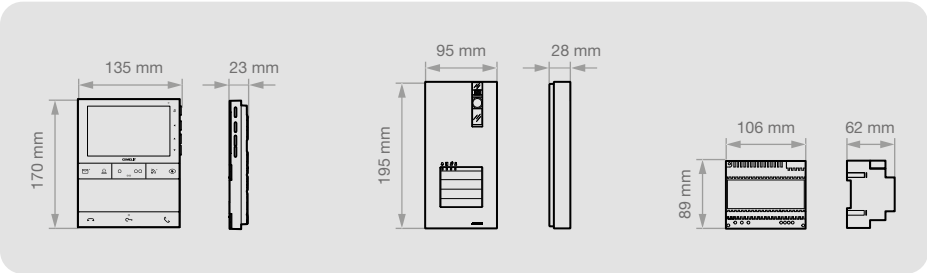

Art. 4893M

Description

Wall-mounted external unit for Quadra series door entry monitor. Die-cast aluminium front panel, wide-angle colour video camera and single LED for night-time lighting. Mechanical buttons with the option of setting 1 to 4 call buttons via DIP-switch. Indicator LED for call sent, lock-release activated, audio activated and system busy. Loudspeaker volume adjustment and audio balancing. Bus line power supply. Dimensions: 95x195x28 mm.

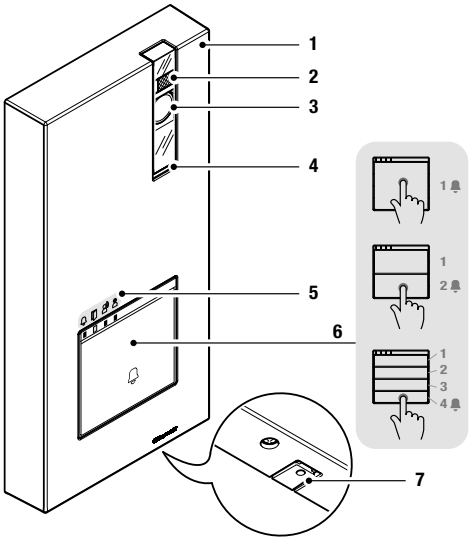

1. Die-cast aluminium cover.
2. Default camera lighting LED, call activated (see Entrance panel settings on page 12).
3. Wide-angle colour video camera.
4. Speaker.
5. Indicator LED:
   call sent / lock-release activated
   audio activated / system busy.
6. Call button 1 / 2 / 4 users.
7. Microphone.

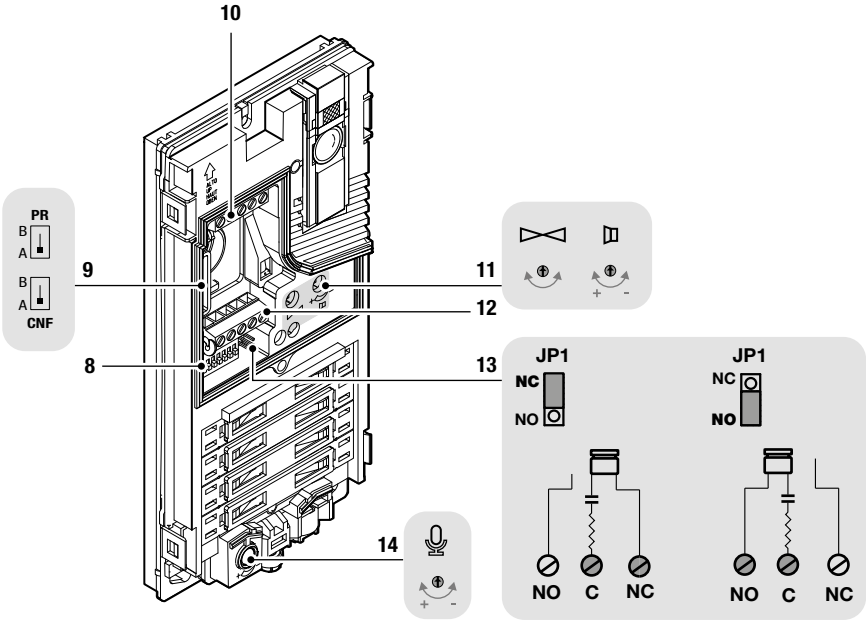

8. **DIP-SWITCH** for function programming.

9. **PR** programming input/output switch.
   CNF programming confirmation switch.

10. Terminal block **M1:**
    LL bus line connection.
    RTE request to exit button input.
    COM common input for RTE and DO contacts.
    DO door open indication input.

11. Audio balancing and loudspeaker volume adjustment.

12. Terminal block **M2:**
    SE- SE+ connection for electric door lock.
    NC NO C relay contacts.

13. **JP1** enabling the RC network for door lock filter on relay contacts.

14. Microphone volume control.

Technical specifications

	GENERAL DATA
Type	Complete unit
Height (mm)	195
Width (mm)	95
Depth (mm)	28
Product weight (g)	300
Product colour	Grey RAL 9006, Black RAL9005
Surface mounting	Yes
	COMPATIBLE SYSTEMS
Simplebus 2 audio/video kit with power supply unit art. 1209	Yes
	AUDIO SPECIFICATIONS
Microphone	6 mm (ø), Omnidirectional
Loudspeaker	36 mm (ø), 8 Ohm, 1W
	CAMERA FEATURES
Camera	Colour
Sensor type	1/4” CMOS
Fixed lens dimensions (mm)	2.1
Viewing angle (H x V - °)	85 x 72
Sensitivity (lux)	0.1 (colours)
	ELECTRICAL SPECIFICATIONS
Type of power supply	Power supply via video entry bus
Power supply voltage	33 VDC
Maximum absorption (W)	8.25
	HARDWARE SPECIFICATIONS
Call type	Buttons
Type of buttons	Mechanical
Number of buttons	4
Backlighting colour	White
Terminals	LL RTE COM DO SE- SE+C NC NO
Number of inputs	2
Number of outputs	2
Output type	Relay (C-NO-NC, 10A@12-24 VAC/VDC), SE: 4A unlock pulse, maintenance current 200 mA for 12 VAC/DC door locks (maximum impedance 18 Ohm)
	SETTINGS
Loudspeaker volume	Yes
Mic volume	Yes
	ENVIRONMENTAL AND CONFORMITY SPECIFICATIONS
IP protection rating	IP54
IK anti-vandal protection rating	IK08
Operating temperature	-25 to 55
Operating humidity (max. RH)	25 to 95
Environmental class	IV
CE certification	RoHS II - 2011/65/EU (EN IEC 63000:2018), EMC 2014/30/EU (EN 61000-6-1:2007, EN 61000-6-3:2007+A1:2011)
	MAIN FUNCTIONS
Lock-release	Yes
Number of auxiliary relays	1
Input for local key button	Yes
Input for door open indication	Yes

Installation

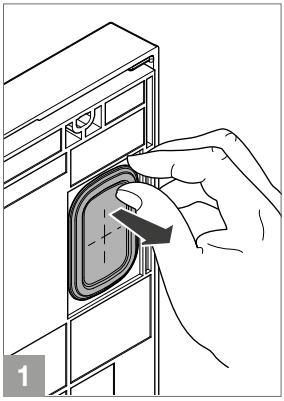

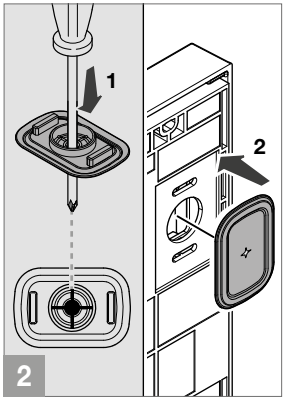

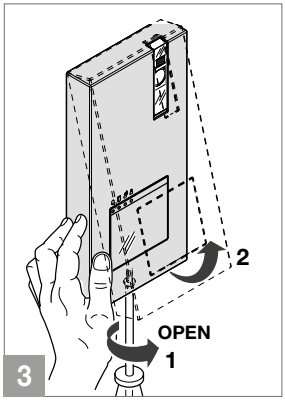

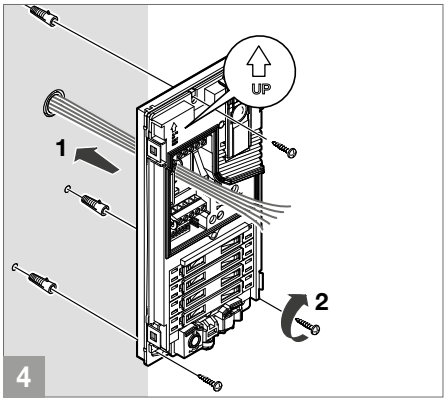

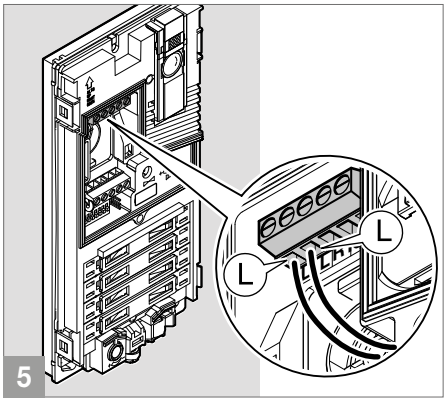

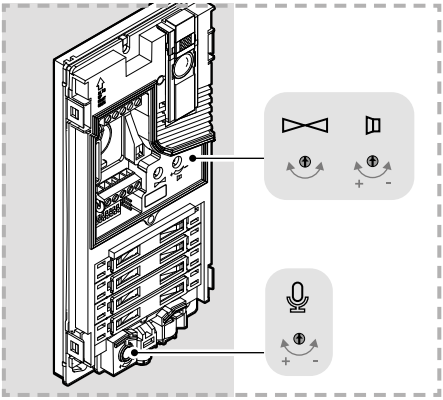

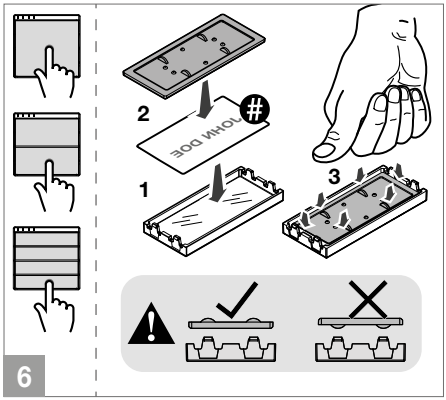

You can download the free software (art. 1235A) to print the entrance panel name cards, using the adhesive pre-cut sheets available in our catalogue (art. 1217A).

Before securing the screw, make sure that you do not need to program the external unit and make sure that the metal front panel does not rub against other metal parts, with consequent risk of damage to its insulating coating.
While the system is running, take care not to accidentally call users when replacing the nameplate labels.

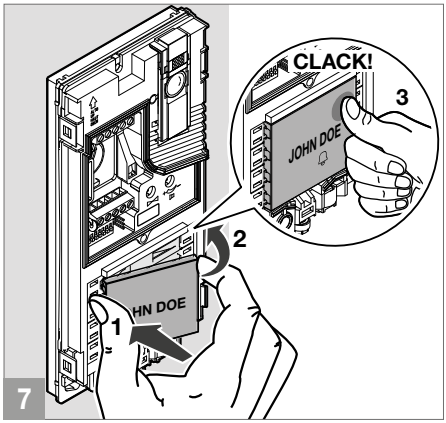

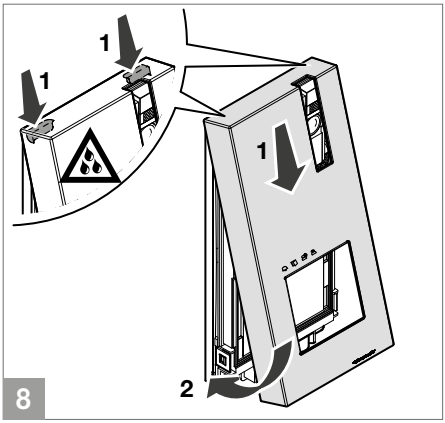

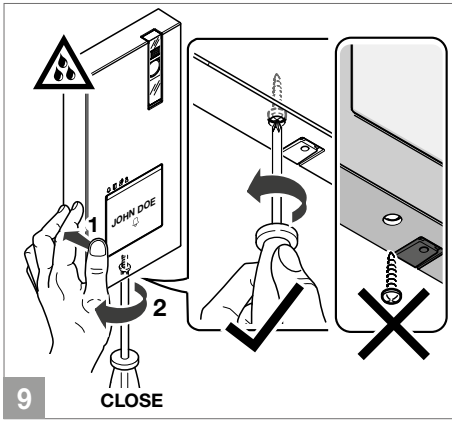

To guarantee the product is water-tight: fit it properly.

CHANGING NAMEPLATES

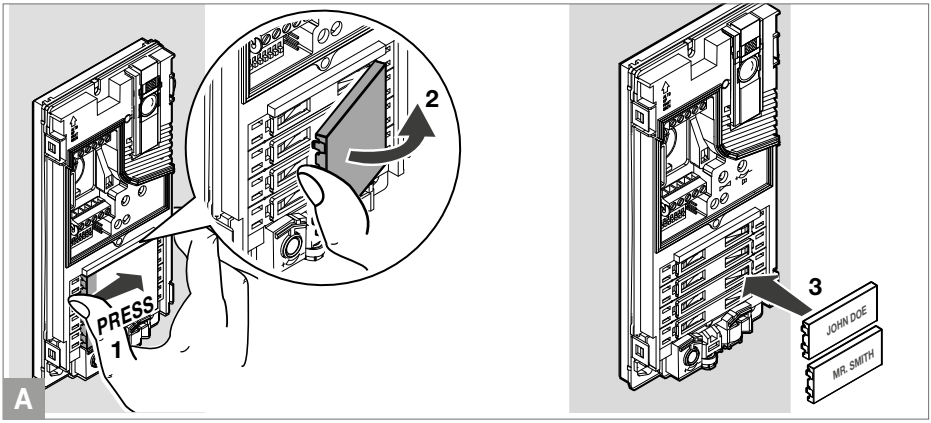

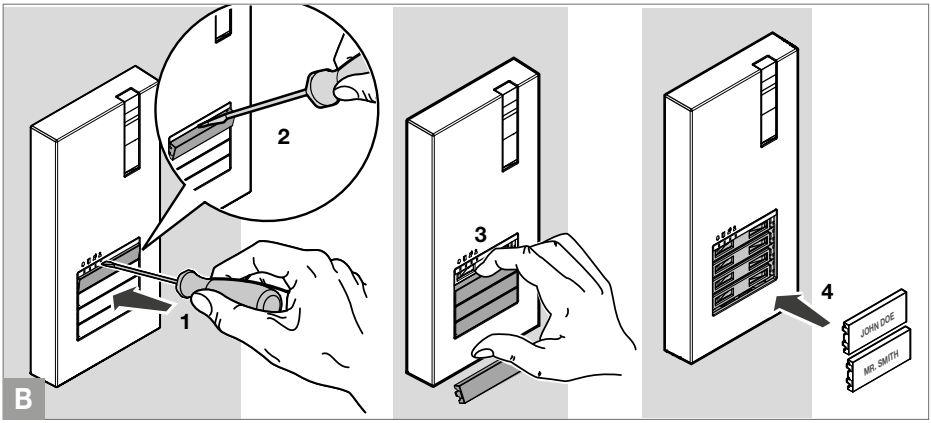

Programming

ENTRANCE PANEL SETTINGS

- Permanently set the S1 DIP-switches corresponding to the function you want to program in accordance with the table below (you do not need to enter programming mode)

			FUNCTION
DIP 1	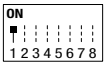		The SE output and the C-NO relay are controlled by 2 separate buttons on the door entry monitor: the key button (SE) and the generic actuator button (C-NO)
	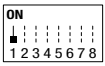	***default***	The SE output and the C-NO relay are controlled by a single button on the door entry monitor: the key button
DIP 2	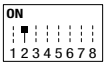		Lock-release activation time: 8 seconds
	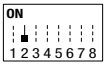	***default***	Lock-release activation time: 2 seconds
DIP 3	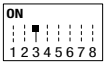		Relay activation time: 8 seconds
	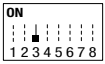	***default***	Relay activation time: 2 seconds
DIP 4	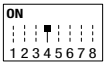		Awaiting reset time: 1 second
	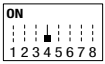	***default***	Awaiting reset time: 10 seconds
DIP 5	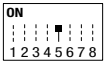		Call transmission: TRIPLE
	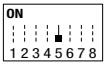	***default***	Call transmission: SINGLE
DIP 6	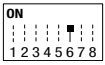		Confirmation tones (call, lock-release, relay, audio enabled): DISABLED
	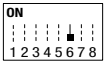	***default***	Confirmation tones (call, lock-release, relay, audio enabled): ENABLED
DIP 7	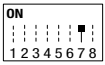		Camera lighting LED: DISABLED
	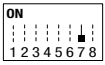	***default***	Camera lighting LED: ENABLED
DIP 8	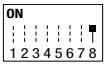		LED lighting of name-holder front panels: OFF
	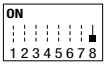	***default***	LED lighting of name-holder front panels: ON

PROGRAMMING USER CODES FOR TWO-FAMILY AND FOUR-FAMILY VERSION

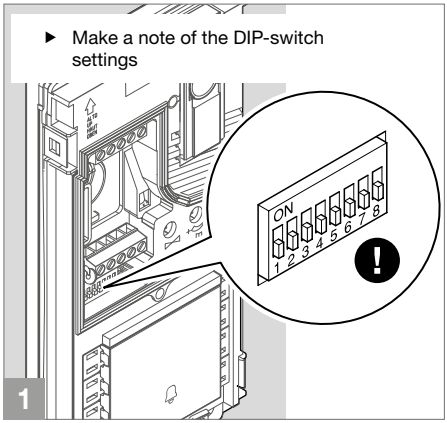

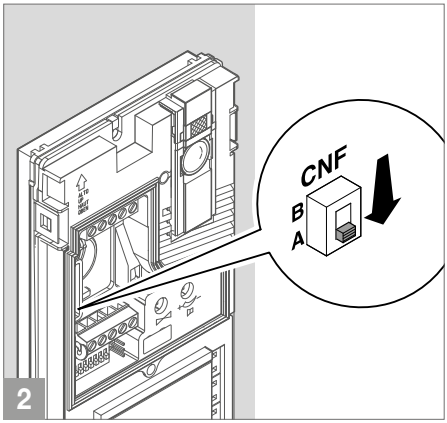

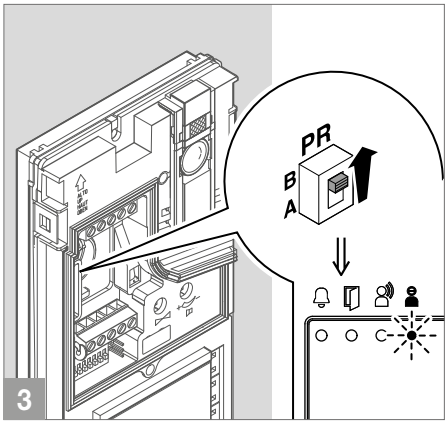

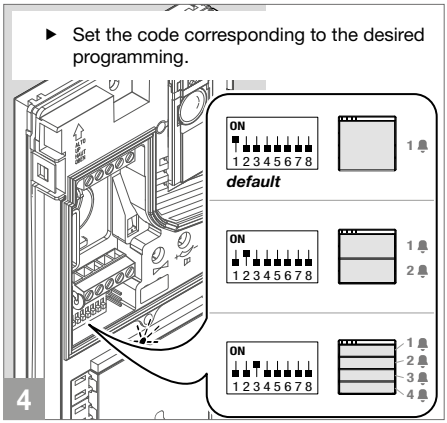

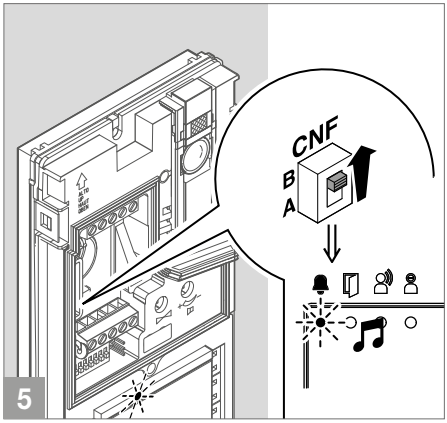

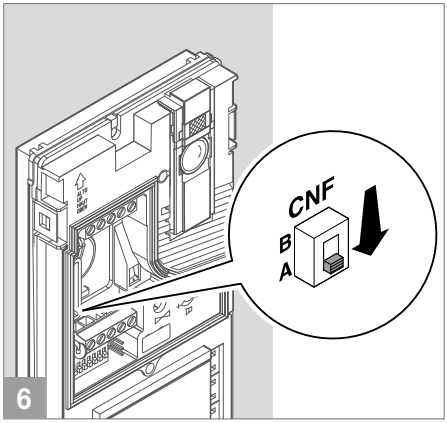

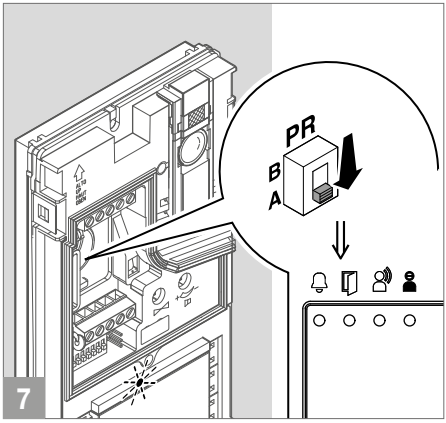
PR
B
A
7

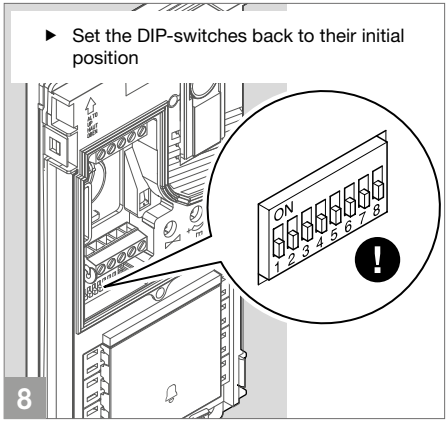
Set the DIP-switches back to their initial position
ON
1 2 3 4 5 6 7 8
8

PROGRAMMING AN ADDITIONAL ENTRANCE PANEL

With switching device art. 1405, **only** one additional entrance panel may be installed.

Program the entrance panel as ***Main*** (P) or ***Secondary*** (S):

- **The Main entrance panel** carries out lock-release (or actuator) commands only when it is in call or self activation mode.
- **The Secondary entrance panel** carries out lock-release (or actuator) commands whether it is in standby or in call or self activation mode.
- If the system is in standby mode the first self activation command will activate the camera of the secondary entrance panel. Further commands switch between the two entrance panels, activating the main entrance panel and the secondary entrance panel alternately.

With switching device art. 1404 (default), more than one additional entrance panel may be installed.

In the configuration of art. 1404, MIN and MAX DIP-switches respectively define the lowest and highest user codes which can be connected to the riser. For information on setting the desired values, refer to "Tabella codici utente" on page 59.

Separate switching devices for different risers must manage code ranges which are not overlapping.

When the system is in standby mode, the first self activation command activates the camera of the entrance panel connected to the LS LS terminals. Further transmissions enable the toggle function between (max.) 2 entrance panels, activating them in turn.

Please refer to the full manual for product 1404, which is available to download from the website **pro.comelitgroup.com**

All the entrance panels must be programmed as shown below:

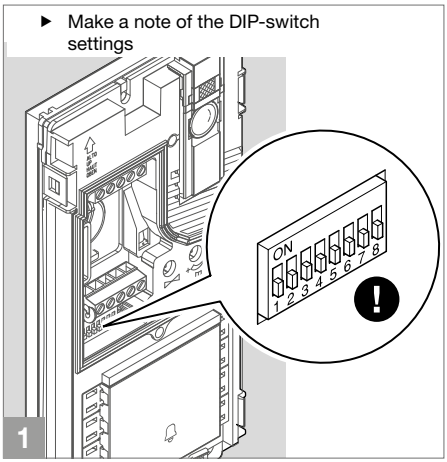

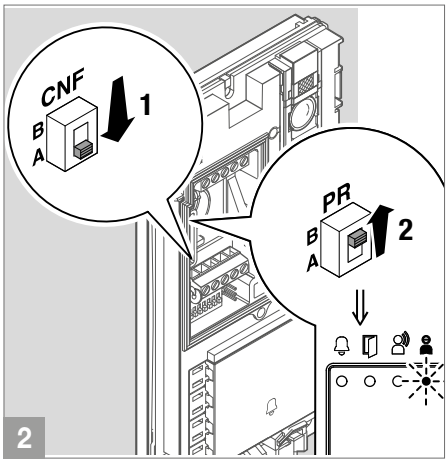

Set the DIP-switch according to your A-B-C system.

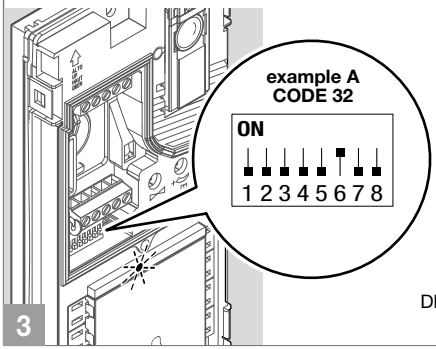

	System type	DIP	code
A)	P — 1405	ON 1 2 3 4 5 6 7 8	32
B)	S — 1405	ON 1 2 3 4 5 6 7 8	16
C) DEFAULT	1404	ON 1 2 3 4 5 6 7 8	8

3

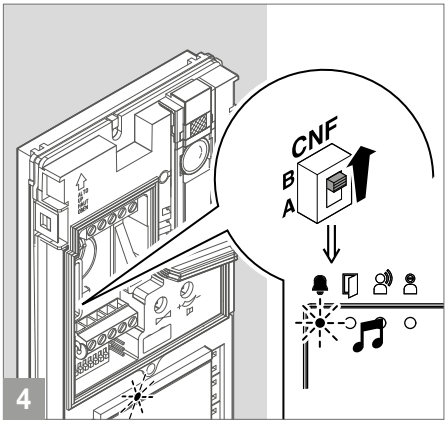

4

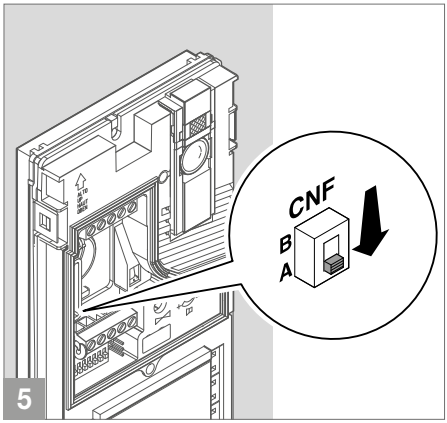

5

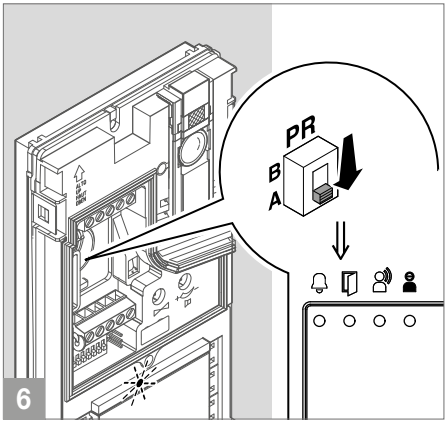

6

- Set the DIP-switches back to their initial position

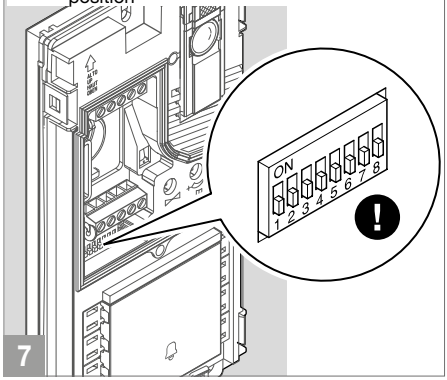

7

PROGRAMMING DESIRED USER CODE

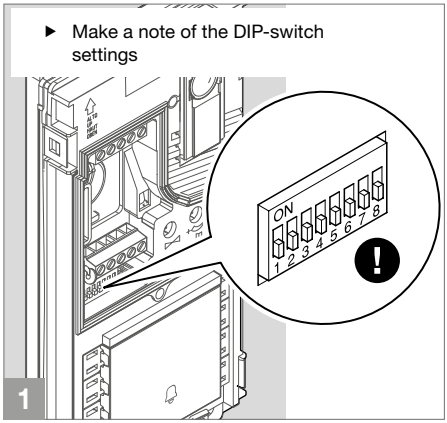

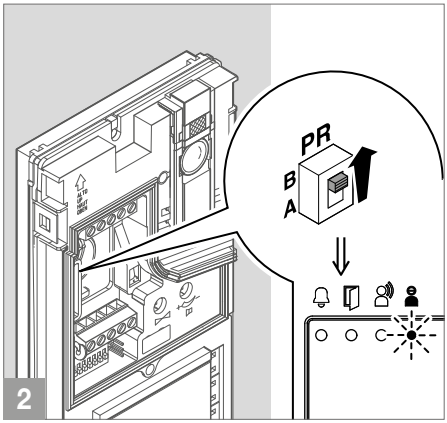

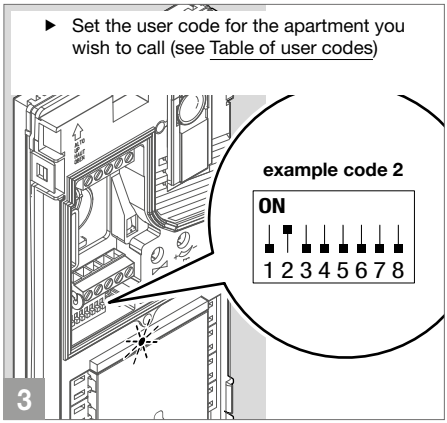

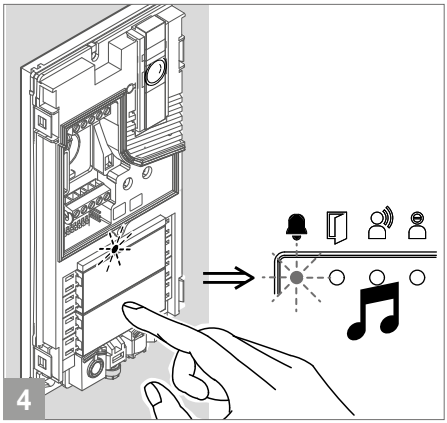

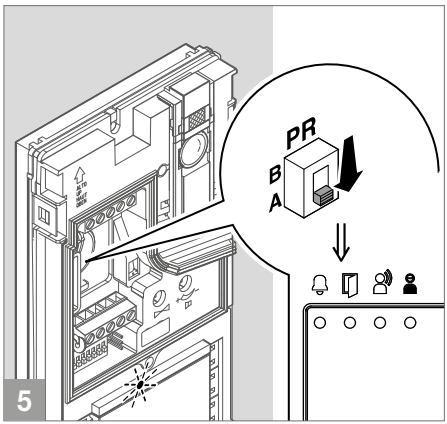

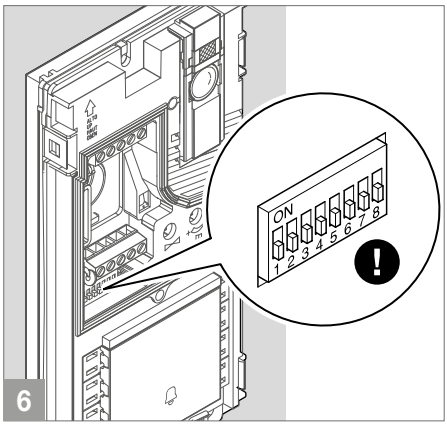

RESTORE FACTORY SETTINGS

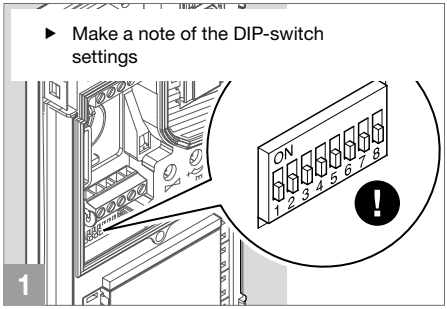

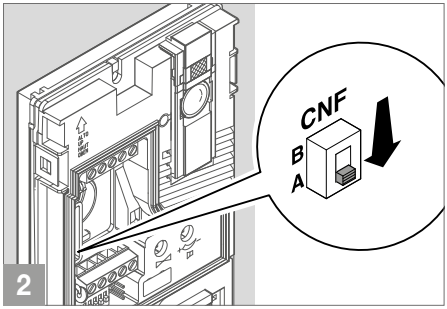

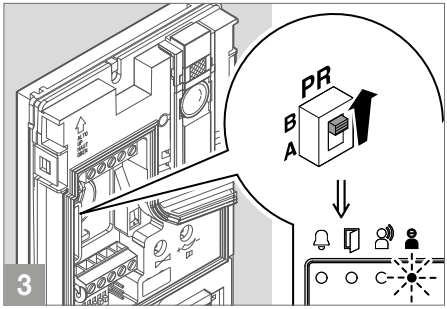

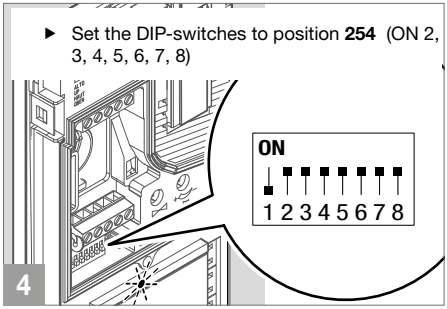

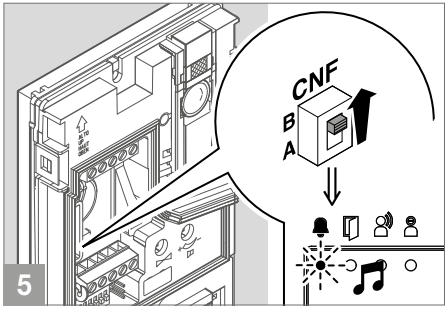

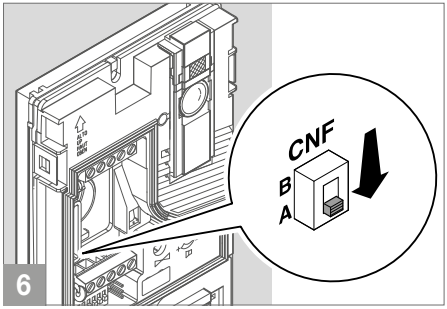

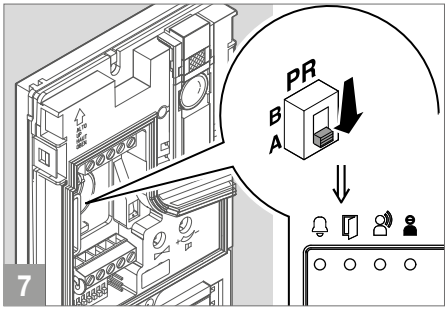

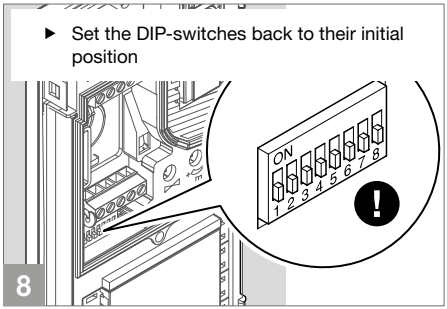

Art. 1209

Description

33 VDC power supply unit for Simplebus 2 KIT, for direct connection to the external unit and internal unit. Equipped with overload and short circuit protection. Input voltage 110-240 VAC. Dimensions: 106 x 62 x 89 mm (6 DIN modules).

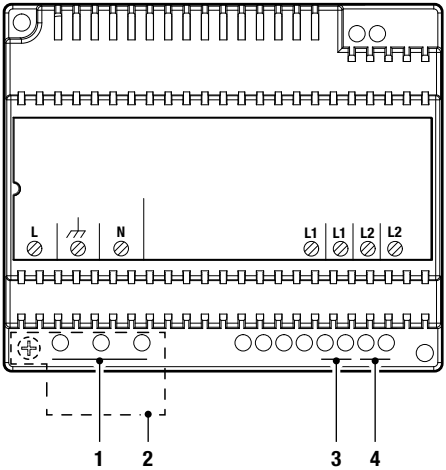

1. **L⏚N** mains power input 110-240 V~.
2. Terminal protection.
3. **L1 L1** main bus line output (31 V ⎓).
4. **L2 L2** riser bus line input (31 V ⎓).

Appliance exclusively for indoor use. Risk of electric shock; proceed with caution. Install inside a closed electrical panel so that it may only be accessed by authorised personnel.

A suitable omnipolar switch with a contact opening of at least 3 mm must be installed upstream of the video entry phone system.

- **Cut off the power supply before carrying out any work.**
- **Place the protective elements back on the terminals.**
- **Do not obstruct the ventilation and cooling slots or apertures.**

Technical specifications

	MAIN FEATURES
Power supply voltage	110-240 VAC
Max. current delivered (A)	1.2
Applicable to DIN rail	Yes
Number of DIN modules	6

	GENERAL DATA
Height (mm)	62
Width (mm)	106
Depth (mm)	89
Coating material type	Plastic
Product colour	White
Operating temperature (°C)	-5 to 40
Operating humidity (max. RH) (%)	25 to 95

	COMPATIBILITY
Audio/Video Kit system	Yes

	ELECTRICAL SPECIFICATIONS
Maximum power delivered (W)	37

Art. PL6741

Description

People series Wi-Fi colour door entry monitor for Simplebus 2 system. Hands-free version with 5” / 16:9 screen. The Comelit app, available to download free of charge from the Google and Apple stores, can be used to manage calls and the main door entry monitor functions directly via smartphone/tablet and Alexa/Ecoshow/ Google Assistant voice assistants, both remotely and on site. Pairing the door entry monitor with the Comelit app is easy, quick and intuitive with the wizard. ✱ *It can also be used to enable the “Facial recognition” function directly from the app, to automatically - once a person has been recognised - send a lock-release command, trigger an actuator to control a light or additional opening and receive notification when a known individual makes a call. It is equipped with a video memory which can store 8 video recordings. It is supplied with a metal surface mounting backplate for stable and strong fixing, and with a line distribution terminal. There are 3 backlit buttons to ensure ease of use: green for the “audio” function, red for the “end communication” function and white for the “electric lock” function. There are also 6 programmable buttons which are pre-configured for the main functions. Meanwhile, there are buttons used to activate Silent mode and to access the menu on the right-hand side of the door entry monitor. It comes as standard with the doorbell function, which can also be programmed for other functions, and terminals for call repetition. The door entry monitor can be programmed, even when switched off, via smartphone using the MyComelit app, which is available to download free of charge. Dimensions (LxHxD): 135 x 170 x 23 mm.*

✱ *For further information, please refer to the full door entry monitor user manual..*

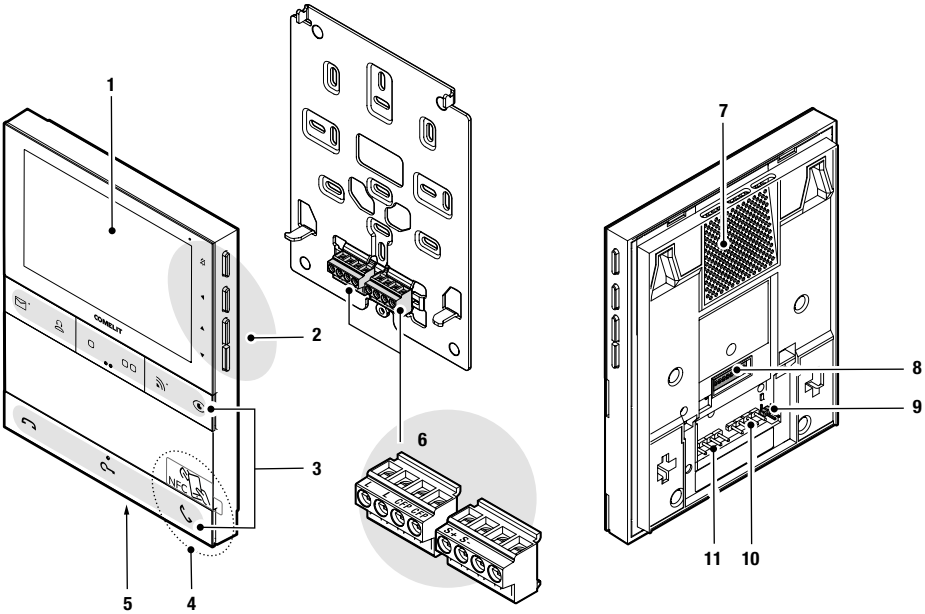

1. 5'' / 16:9 LCD screen.
2. Mechanical side buttons.
3. Mechanical front buttons, with touch guides for sight impaired users on the middle buttons of each row.
4. NFC detection area, identified by a removable sticker.
5. Microphone.
6. Terminal block for connection:

   L L Terminals for bus line connection.

   CFP CFP Terminals for doorbell connection.

   S+ S- Terminals for connection of additional ringtone art. 1229 or relay art. 1122/A (see diagram, page 54)
7. Speaker.
8. Dip-switch for programming the user code.
9. **CV5** Jumper for video closure.
10. Pin for securing the terminal block S+ S-.
11. Pin for securing the terminal block L L CFP CFP.

FRONT BUTTONS - FACTORY PROGRAMMING

Video memo ★

- Press the button to view the recorded video.

Standard switchboard call ★

- Press the button to send a call to the porter switchboard.

Generic actuator ★

- Press the button to activate a generic actuator (art. 1256) or the relay for the external entrance panel.

Intercom call to the same apartment ★

- Press the button to make a call to ALL door entry monitors in the same apartment.

Pair Comelit App ★

- Press the button to launch the Comelit App pairing procedure.

Self activation ★

- Press the button to access real-time viewing of the images on the external entrance panel camera.

End of communication

- Press the button to end the audio communication.

Lock-release ★

- Press the button to activate the door lock.

Automatic lock-release on receipt of call

This button can also be used to enable "Auto lock-release on receipt of call", which allows automatic activation of the lock-release relay on receipt of a call originating from the external entrance panel.

√ *The function must be authorised by the installer using the MyComelit app or via the installer menu on the door entry monitor.*

- When the door entry monitor is in standby, press for 5 seconds to enable/disable "Automatic lock-release on receipt of call" mode.
  - » *A confirmation tone will play.*
  - » *The text "AUTO LOCK-RELEASE ACTIVATED/DEACTIVATED" appears on the door entry monitor display for 3 seconds.*
  - » *The steadily lit LED indicates that the function is active.*

Start communication (speech button)

- Press the button to activate communication.

Automatic answer

This button can also be used to enable "Automatic answer", which allows automatic activation of the audio on receipt of a call originating from the external entrance panel.

√ *The function must be authorised by the installer using the MyComelit app or via the installer menu on the door entry monitor.*

- When the door entry monitor is in standby, press for 5 seconds to enable/disable "Automatic answer" mode.
  - » *A confirmation tone will play.*
  - » *The text "AUTOMATIC ANSWER ACTIVATED/DEACTIVATED" appears on the door entry monitor display for 3 seconds.*
  - » *The steadily lit LED indicates that the function is active.*

★ *To change the factory programming for the buttons, please refer to the chapter* Programming the door entry monitor on page 36.

SIDE BUTTONS

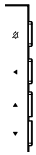

	Button for activating **“Silent mode”**	
◀	Confirm button	**Menu access and navigation button**
▲ ▼	Buttons for scrolling menus and selecting values	

ACTIVATING “SILENT MODE”

- Press to activate/deactivate **Silent mode.**

» *The red LED indicates that the function is active.*

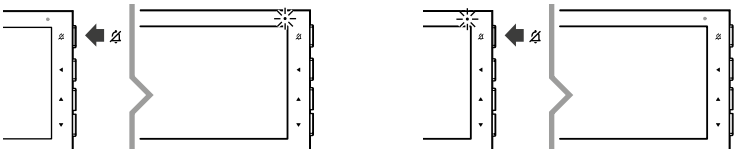

ACCESSING AND NAVIGATING MENUS

- Press **one** of the following buttons to access the **user menu**.

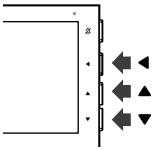

CAUTION

If the red LED flashes 4 times, this means that the system is busy and that the user menu cannot be accessed at this time.

CAUTION

If the icon appears while you are navigating the user menu and the door entry monitor switches off, this means that the system is busy and you cannot navigate the user menu at this time.

- Press ▲ and ▼ to scroll through the menu and/or select the values, then press ◀ to confirm the selection.

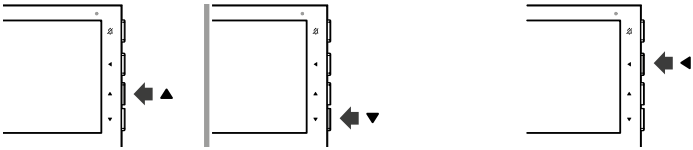

User menu options

Exit	Select this menu to exit the User menu
Video memo	Select this menu to: • View recordings saved in the memory (up to 8 video memos can be saved) [Browse] • Activate/deactivate [ON/OFF] the Video memo function [Settings] • Delete **all** recordings [Clear]
Wi-Fi	Select this menu to: • Pair the Comelit app via QR code; [Pair Comelit app] • Enable /disable [ON/OFF] the LED indicating Wi-Fi connection status [Wi-Fi fault LED]
Settings	Select this menu to: • Configure the time zone, date and time for the device [Date/ time] • Configure the language in which the menus and alert messages will be displayed [Language] • Carry out diagnostics and access information on the device [Diagnostics and info] (speed test, device update, send test notification, restart device, remote debug log, view information on the device and QR code for the user manual) • Reset [Reset] the Wi-Fi settings, users and/or facial recognition parameters
Adjustments	Select this menu to access the submenus that are used to adjust the following parameters: • Ringtone volume*:* select to adjust the ringtone volume • Ringtone*:* select to configure the ringtone melody as desired for calls from the external entrance panel • Audio volume: select to adjust the speaker volume • Brightness*:* select to adjust the display brightness • Contrast*:* select to adjust the display contrast • Colour*:* select to adjust the display colours
Programming	Select this menu to configure the following functions:

Silent mode

Select this menu to configure the function activation **Mode** and the operating time band **Programming**:

- **Manual**: in this mode, silent mode activation/deactivation is managed by pressing .
- **Automatic**: in this mode, silent mode activation/deactivation is managed by means of time bands programmed via the user menu. *

» When the mode is enabled the LED is lit.

Auto lock-release

√ *The function must be authorised by the installer using the MyComelit app or via the installer menu on the door entry monitor.*

Select this menu to configure the function activation **Mode** and the operating time band **Programming**:

- **Manual**: in this mode, auto lock-release activation/deactivation is managed by pressing and holding (5 sec.) .
- **Automatic**: in this mode, auto lock-release activation/deactivation is managed by means of time bands programmed via the user menu. *

» When the mode is enabled the LED is lit.

Automatic answer

√ *The function must be authorised by the installer using the MyComelit app or via the installer menu on the door entry monitor.*

Select this menu to configure the function activation **Mode** and the operating time band **Programming**:

- **Manual**: in this mode, automatic answer activation/deactivation is managed by pressing and holding (5 sec.) .
- **Automatic**: in this mode, automatic answer activation/deactivation is managed by means of time bands programmed via the user menu. *

» When the mode is enabled the LED is lit.

Call range

√ *The function must be authorised by the installer using the MyComelit app or via the installer menu on the door entry monitor.*

Select this menu to configure the function activation **Mode** and the operating time band **Programming**:

- **Manual**: in this mode, call range activation/deactivation is managed by pressing and holding (5 sec.) and .
- **Automatic**: in this mode, call range activation/deactivation is managed by means of time bands programmed via the user menu.

» When the mode is enabled the LED flashes.

* For information regarding time band programming, please refer to the full online user manual.

INDICATOR LED

	Red LED	***Flashing:*** communication taking place.
	White LED	***Flashing:*** incoming call/communication taking place. ***Flashing with door entry monitor in standby:*** “Door open” indication. ***Lit steadily with door entry monitor in standby:*** “Auto lock-release on receipt of call” mode enabled.
	Green LED	***Flashing:*** incoming call. ***Lit steadily:*** communication taking place. ***Lit steadily with door entry monitor in standby:*** “Automatic answer” mode enabled.
	Red LED	***4 flashes:*** system busy / other door entry monitor in the system on. ***Lit steadily:*** silent mode enabled.
	White LED	***Flashing:*** there are recordings which have not yet been viewed.
	White LED	***Slow flashing:*** pairing process with the Comelit app underway. ***Rapid flashing:*** Wi-Fi connection lost.
		Sequential lighting when a button is pressed: the device is starting up. Wait for all LEDs to turn off before performing any operation.

Technical specifications

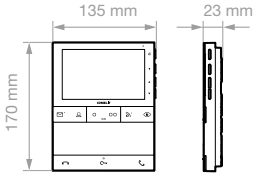

	GENERAL DATA
Product weight	430 grams
Product colour	White RAL9003, Black RAL9005
Coating material type	ABS, PMMA
Surface mounting	Yes
Desk base mounting	Yes, with specific accessory

	COMPATIBLE SYSTEMS
	Simplebus 2 audio/video with power supply unit art. 4888C
	Simplebus 2 audio/video with power supply unit art. 1210/1210A
	Simplebus 2 audio/video kit with power supply unit art. 1209

	DISPLAY
Display size	5''
Type of display	TFT
Aspect ratio	16:9
Resolution (pixels)	800x480
On-screen menu (OSD)	Yes

	AUDIO SPECIFICATIONS
Type	Hands-free
Microphone	6 mm (Ø), Omnidirectional
Loudspeaker	36 mm (ø), 40 Ohm, 1W

	ELECTRICAL SPECIFICATIONS
Type of power supply	Power supply via video entry bus
Power supply voltage	33 VDC
Absorption in standby	0.3W
Maximum absorption	8.6W

	HARDWARE SPECIFICATIONS
Type of buttons	Mechanical
Total buttons (no.)	9
Backlighting colour	Green, White, Red
Terminals	L L CFP CFP S+ S-
Removable terminals	Yes
Number of inputs (no.)	1
Number of outputs (no.)	1
	SETTINGS
Loudspeaker volume	Yes
Ringtone volume	Yes

Screen brightness	Yes
Screen contrast	Yes
Screen colour	Yes

	NETWORK AND COMMUNICATION PROTOCOL
Type of Wi-Fi connection	Wi-Fi IEEE 802.11 b/g/n, 2.4 Ghz, 13 channels, Wi-Fi 6
Encryption method and supported authentication	TKIP WPA2-PSK, WPA3
Firmware updating via Comelit Cloud	Yes
Compatible with Comelit App	Yes
User function programming via OSD menu	Yes
Installer function programming via OSD menu	Yes
Function programming via NFC and MyComelit app	Yes

	ENVIRONMENTAL AND CONFORMITY SPECIFICATIONS
IP protection rating	IP30
Operating temperature (°C)	5 - 40 °
Operating humidity (max. RH)	25 - 75 %
Environmental class	I (B1)
CE certification	RoHS II - 2011/65/EU (EN IEC 63000:2018), RED 2014/53/EU (EN 62311:2008, EN 62368-1:2014, EN 61000-6-1:2007, EN 61000-6-3:2007 + A1:2011, ETSI EN 301 489-1 V2.2.0, ETSI EN 301 489-17 V3.2.0, ETSI EN 300 328 V2.1.1)

	GENERAL FEATURES
Lock-release	Yes
Automatic lock-release on receipt of call	Yes
Silent mode	Yes
Self activation	Yes
Switchboard call	Yes
Intercom calls	Yes
Selective intercom call	Yes
Panic call	Yes
Input for doorbell	Yes
Call repetition	Yes
Customisable ringtone	Yes
Automatic answer	Yes
Video memo	Yes
Actuator control	Yes
Integration with voice assistants	Yes
Facial recognition	Yes
Door open indication	Yes
Acoustic indications	Yes
Visual indications	Yes
Date/time display	Yes

Programming the user code

A user code must be assigned to the door entry monitor. The user code can be programmed via the MyComelit app or using the dip-switches.

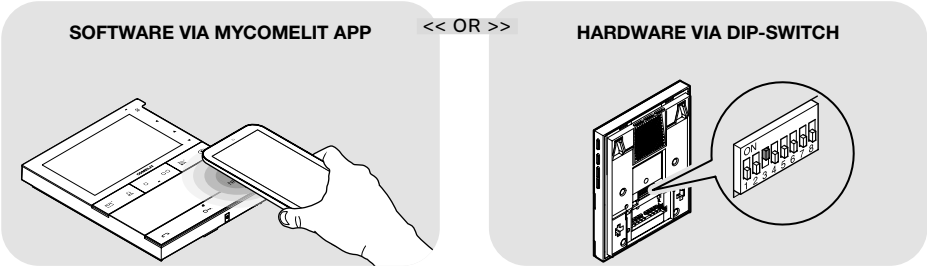

PROGRAMMING THE USER CODE VIA THE MYCOMELIT APP

*The door entry monitor has an NFC connection which means it can be programmed quickly and easily **via the MyComelit app**, available to download free of charge.*

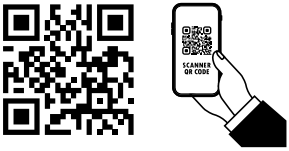

Programming can even take place while the door entry monitor is off, and without removing the device from its packaging! The user code for several door entry monitors can be programmed in sequence!

To program the user code using the MyComelit App, follow the procedure shown in this video tutorial or read the following instructions carefully.

√ All dip-switches must be set to OFF (factory programming) and should remain OFF even during normal operation.

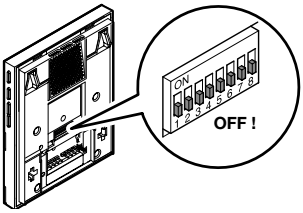

1. Open the MyComelit app and log in (or create a new account if it is the first time you have accessed it).
2. Select "PEOPLE DOOR ENTRY MONITORS SETUP".

3. Enter the desired user code and press “WRITE”.

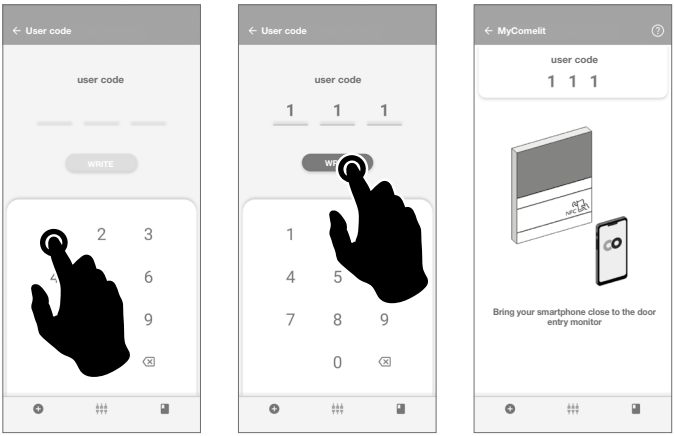

4. Bring your smartphone close to the NFC detection area of the door entry monitor (identified by its label) and make a circular motion until you feel it vibrate.
The vibration indicates that writing is taking place. Hold your smartphone in place until the procedure is complete.

» *A tick indicates that writing was successful.*

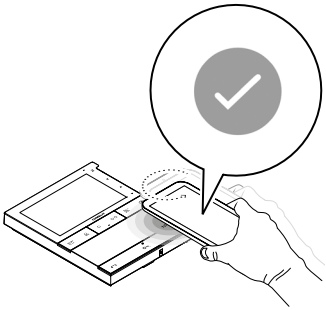

5.A Press "END" to end the user code programming procedure on the door entry monitor.

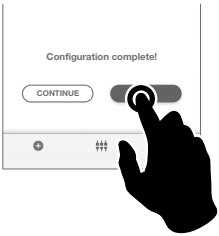

OR
if you want to program the user codes for other door entry monitors in sequence:

5.B Press "CONTINUE".

6.B Select the desired increment interval.

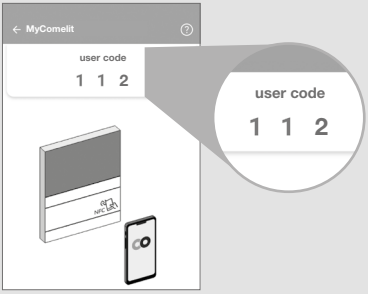

7.B Bring your smartphone close to the NFC detection area of the new door entry monitor (identified by its label) and make a circular motion until you feel it vibrate.
The vibration indicates that writing is taking place. Hold your smartphone in place until the procedure is complete.

» *A tick indicates that writing was successful.*

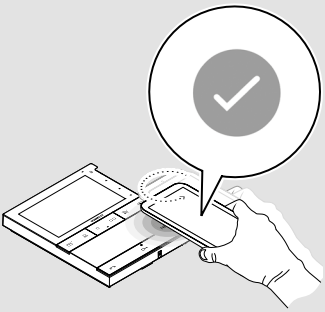

8.B Repeat step **7.B** for each door entry monitor on which you want to program the user code.

PROGRAMMING THE USER CODE USING THE DIP-SWITCHES

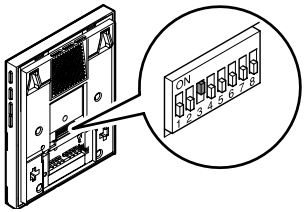

- Set the DIP-switches to **ON** to program a user code on the door entry monitor, as per Table of user codes.

Example: code 4.

Installation

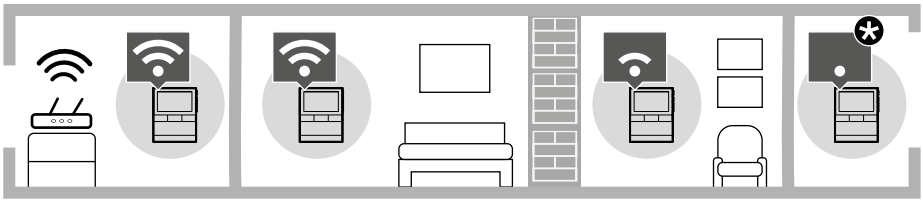

The Wi-Fi signal is not strong enough to guarantee correct operation. A Wi-Fi repeater must be installed between the router and door entry monitor in order to improve the Wi-Fi signal received by the door entry monitor.

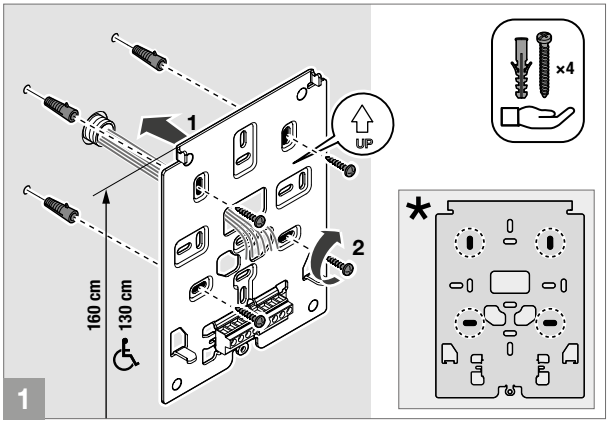

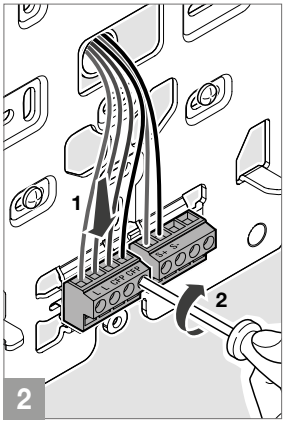

*** *Fixing points for use when installing in compatible boxes**

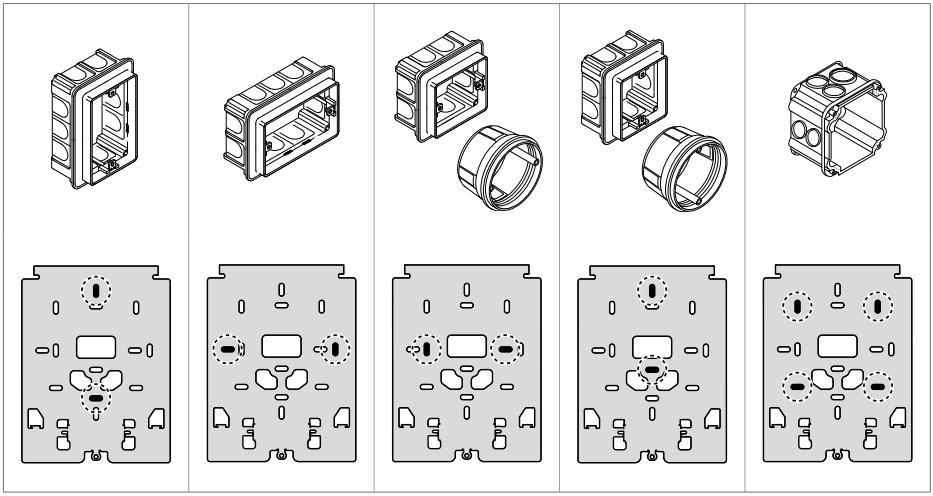

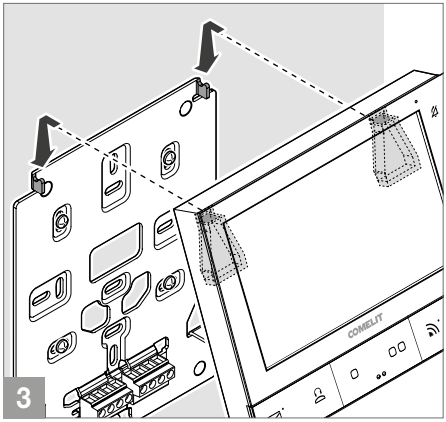

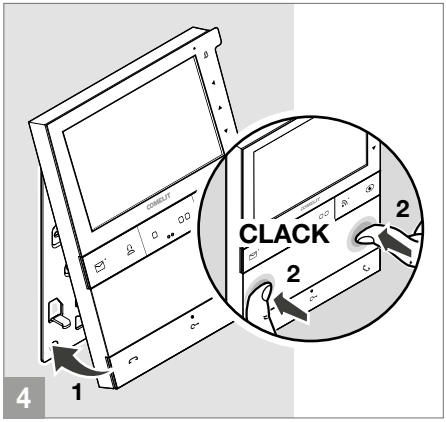

DISASSEMBLING THE DOOR ENTRY MONITOR

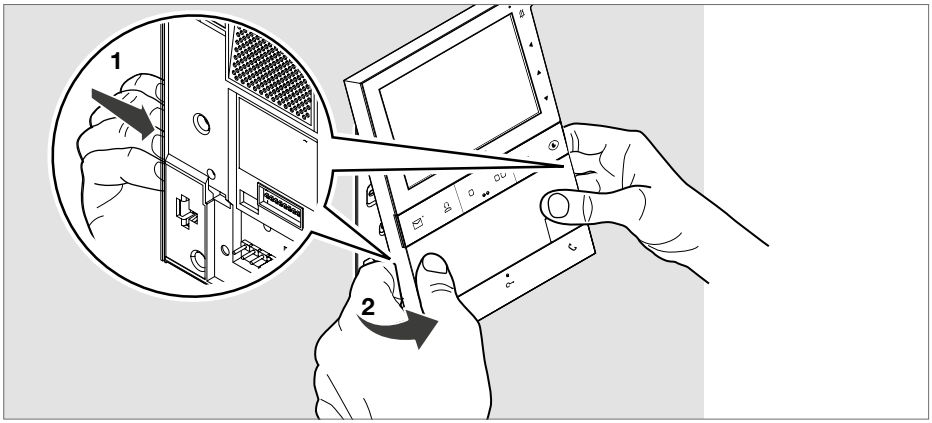

Programming the door entry monitor

The programming can be customised:

- *Using the **MyComelit app** via a smartphone*
- *Using the **installer menu** on the door entry monitor*

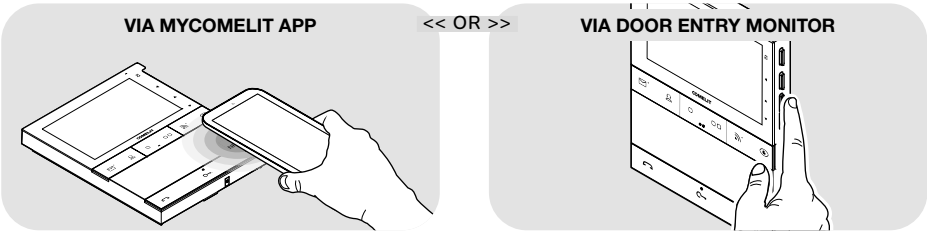

PROGRAMMING VIA INSTALLER MENU

√ *The first time the door entry monitor is switched on, you will need to configure the device language; you will also be able to set the date and time if necessary.*

1. Press **one** of the following buttons to access the **user menu**.

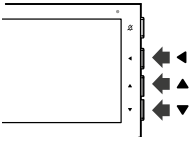

2. Press▲ and ▼ for 5 sec to access the **installer menu**.

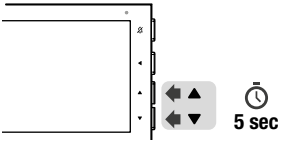

» *A confirmation tone will sound and the following screen will appear.*

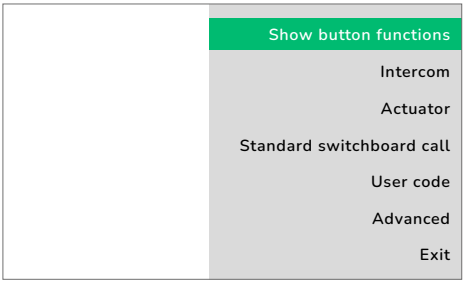

CAUTION

If the red LED flashes 4 times, this means that the system is busy and that the user/installer menu cannot be accessed at this time.

CAUTION

If the icon appears while you are navigating the user menu and the door entry monitor switches off, this means that the system is busy and you cannot navigate the user menu at this time.

3. Press ▲ and ▼ to scroll through the menu and/or select the values.
Press ◀ to confirm the selection.

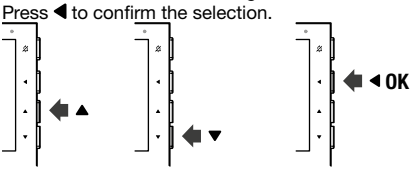

» *When the element is selected, the text will be highlighted in green.*

4. To exit the installer menu, select Exit or wait for 2 minutes (timeout period) without doing anything.

Show button functions **MENU**

By selecting this menu, the functions currently assigned to the buttons on the door entry monitor are displayed. The factory-set functions are as follows:

PROGRAMMED FUNCTION	BUTTON
Video memo	
Standard switchboard call	
Generic actuator	
Intercom to same apartment	
Press a button to continue	1/2

▶ Press a button to continue ◀▲▼ and view all the functions programmed on the corresponding buttons.

PROGRAMMED FUNCTION	BUTTON
Pair Comelit app	
Self activation	
Lock-release	
Doorbell	CFP
Press a button to exit	2/2

▶ Press a button to exit ◀▲▼.

EXAMPLE: PROGRAMMING THE INTERCOM FUNCTION TO OTHER APARTMENT

1. Press **one** of the following buttons to access the **user menu**.

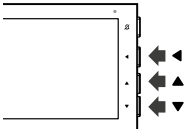

2. Press▲ and ▼ for 5 sec to access the **installer menu**.

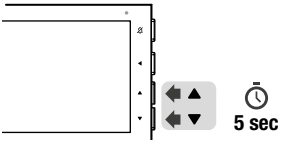

» *A confirmation tone will sound and the following screen will appear.*

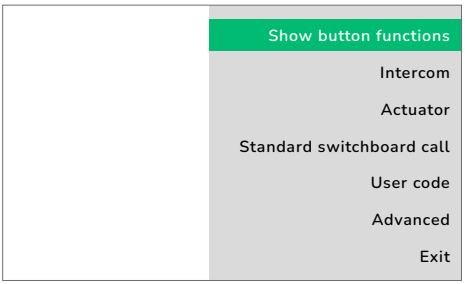

3. Press ▼ to select the Intercom function

» *The menu will be highlighted in green.*

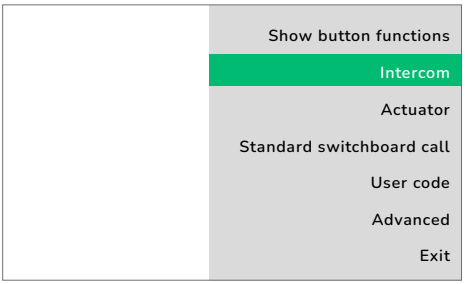

4. Press the confirm button

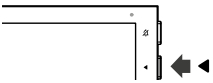

» *The following window will appear.*

5. Press ▼ to select To other apartment.
   » *The menu will be highlighted in green.*

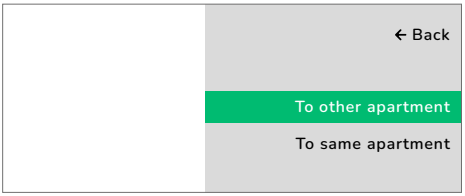

6. Press the confirm button

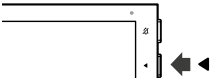

   » *The following window will appear.*

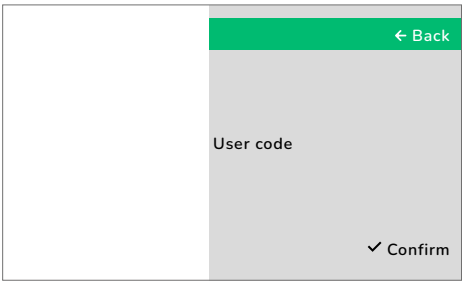

7. Press ▼ to select User code.

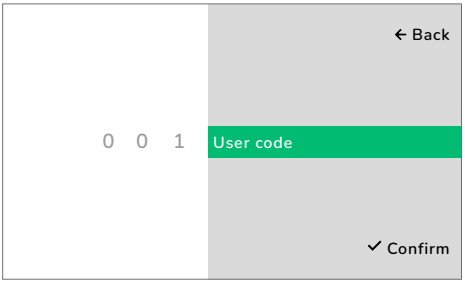

8. Press ◀ to select the number you want to change.
   » *The checkbox will turn green and two arrows will appear in line with the number that can be changed.*

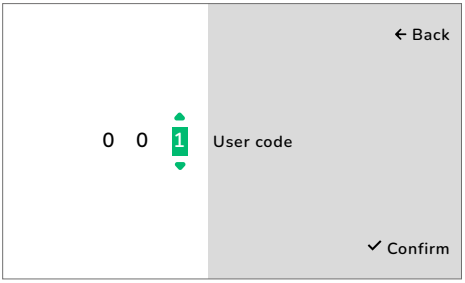

9. Use ▲ and ▼ to set the desired value (example: [3]).

Set a value between 1 and 240 inclusive.

10. Press ◀ to select another number to change and/or to return to the User code menu.

11. Press ▼ to select ✓ Confirm.

» *The menu will be highlighted in green.*

12. Press the confirm button

13. Press the button to be associated with the function.

» *At the end of programming a confirmation message will be displayed.*

If ✉ is configured to activate another function, the MyComelit app should be used to restore the video memo function.

EXAMPLE: PROGRAMMING THE INTERCOM FUNCTION TO SAME APARTMENT

1. Press **one** of the following buttons to access the **user menu**.

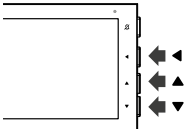

2. Press▲ and ▼ for 5 sec to access the **installer menu**.

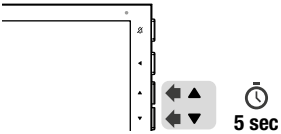

» *A confirmation tone will sound and the following screen will appear.*

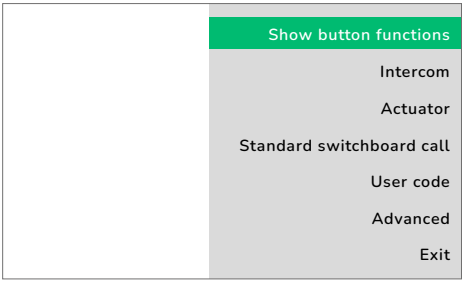

3. Press ▼ to select the Intercom function

» *The menu will be highlighted in green.*

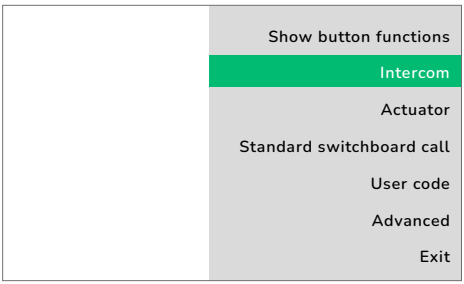

4. Press the confirm button

» *The following window will appear.*

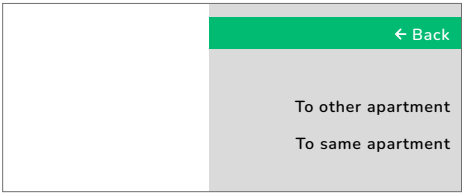

5. Press ▼ to select `To same apartment`.

   » *The menu will be highlighted in green.*

6. Press the confirm button

7. Press the button to be associated with the function.

   » *At the end of programming a confirmation message will be displayed.*

If ✉ is configured to activate another function, the MyComelit app should be used to restore the video memo function.

INSTALLER MENU NAVIGATION TREE

Show button functions

Select this menu to view the functions currently assigned to the buttons on the door entry monitor.

PROGRAMMED FUNCTION	BUTTON
Video memo	
Standard switchboard call	
Generic actuator	
Intercom to same apartment	
Press a button to continue	1/2

PROGRAMMED FUNCTION	BUTTON
Pair Comelit app	
Self activation	
Lock-release	
Doorbell	CFP
Press a button to exit	2/2

Intercom

Select this menu to configure the intercom call To other apartment or To same apartment.

- To other apartment
  - User code
- To same apartment

Actuator

Select this menu to configure a button or the CFP input to control a generic actuator or an actuator with code.

- General
  - Pair with button
  - Pair with CFP input
- With code
  - Code
    - Pair with button
    - Pair with CFP input

Standard switchboard call

Select this menu to configure a button to make the call to standard porter switchboard.

User code

Select this menu to configure the door entry monitor user code.
The dip-switches must be set to OFF (factory programming) and should remain OFF even during normal operation.

- Current code: 1
- User code

Advanced

Select this menu to access the advanced settings.

Date format

Select this menu to configure the date display format.

- Date format
  - DD/MM/YYYY
  - MM/DD/YYYY
  - YYYY/MM/DD

Ringtone settings

Select this menu to configure the ringtone melodies for the doorbell, call from switchboard, intercom call or call with range.

- Doorbell
  - (1/4)
- Call from switchboard
  - (1/7)
- Intercom call
  - (1/7)
- Call with range
  - (1/7)

Selective intercom

Select this menu to configure Selective intercom or Selective group call on the buttons.

- Intercom code
  - Programming
    - Intercom code
  - Delete
- Selective
  - Intercom code
- Selective group
  - Intercom code
  - Intercom code
  - Intercom code
  - Intercom code

Self activation

Select this menu to configure a button to perform self activation.

Remote camera module

Select this menu to configure buttons to control a generic stand-alone camera module or a stand-alone camera module with code.

- General
- Code 220
- Code 221
- Other codes
  - Code

Advanced

Panic call

Select this menu to configure a button or the CFP input to transmit a priority call to the porter switchboard.

- Pair with button
- Pair with CFP input

Switchboard call

Select this menu to configure a button to make the call to standard or main porter switchboard.

- Main
- Standard

No function

Select this menu to cancel the function configured on the button.

Auto lock-release

Select this menu to Authorise/Not authorise the function.

- Status
  - Authorised
  - Not authorised

Automatic answer

Select this menu to Authorise/Not authorise the function.

- Status
  - Authorised
  - Not authorised

Doorbell

Select this menu to configure the CFP input to transmit a doorbell call (default) if it had previously been configured for another function.

- Pair with CFP input

Lock-release

Select this menu to configure the lock-release function on the CFP input or on the button (default) if it was previously configured for another function.

- Pair with button
- Pair with CFP input

Call range programming

Select this menu to Authorise/Not authorise the function and configure the Minimum/ maximum user codes

- Authorised
  - Minimum user code
    - Minimum user code
  - Maximum user code
    - Maximum user code
- Not authorised

Advanced

Disable menu

Select this menu to disable the installer menu, or both the user menu and the installer menu, on the door entry monitor. From the moment the installer menu is disabled, the door entry monitor can only be configured via the MyComelit app.

Installer

Enable

Disable

User + Installer

Enable

Disable

Diagnostics

Select this menu to configure the following diagnostics procedures:

Remote debug log

Enable

Disable

Send test notification

Speed test

Restart

Update door entry monitor

Select this menu to manually update the door entry monitor to the latest available firmware version.

Update

About

Select this menu to:

- *view information on the device (product code, user code, firmware version, owner email address, IP address + subnet mask, gateway, MAC address, ssid name)*
- *download this full technical manual using the QR code (on the first page)*
- *view the ID32 code of the device using the QR code (on the second page)*

Factory reset

Select this menu to restore all configurations to their factory values.

Are you sure to reset

Exit

Select this menu to return to the user menu.

PROGRAMMING VIA MYCOMELIT APP

√ Update the MyComelit App to the latest available version.

√ ONLY if programming the user code via the app, all dip-switches must be set to OFF (factory programming) and should remain OFF even during normal operation.

√ If the user code is programmed via dip-switch (and therefore the dip-switches are not all set to OFF), the other door entry monitor functions can still be programmed using the MyComelit App (with the exception of the user code).

The MyComelit app can be used to program the door entry monitor quickly and easily, even while it is switched off.

When the MyComelit app is used to configure the door entry monitor, the language, date and time are set automatically.

The MyComelit app makes it possible to:

- Read all door entry monitor programming.
- Edit and rewrite the programming.
- Create programming offline, save it to your smartphone and then write it on the door entry monitor later.
- Create and save your favourite programming to your smartphone.
- Increase the user code by a configurable value to allow the programming of door entry monitors in sequence.
- Copy the programming of one door entry monitor to another door entry monitor.
- Share the door entry monitor programming with other users (via WhatsApp, etc.) to facilitate technical support.
- …

In addition to these functions, the MyComelit app can also be used for the following functions:

- To program the user code (only if it has not been programmed using the DIP-switches, see Programming the user code via the MyComelit app on page 30).
- To program the functions to be associated with the buttons.
- To change the ringtones for:
  - Call from external entrance panel.
  - Doorbell (CFP).
  - Call from switchboard.
  - Intercom call.
  - Call with range.
- To change the functions associated with the CFP input (see Functions associated with the CFP input on page 50).
- To program the following functions:
  - Intercom (see Intercom on page 49).
  - Selective intercom (see Selective intercom on page 49).
  - Selective group intercom (see Selective group intercom on page 49).
- To authorise the user to utilise the following functions:
  - “Door opening upon call” (see Automatic lock-release on receipt of call on page 23).
  - “Automatic answer” (see Automatic answer on page 23).
- To program the minimum and maximum call codes for the call range function (see Call range on page 50).
- To disable the user and/or installer menu on the door entry monitor.
- Disable the “Silent Mode” button or select the ringtones to silence.
- To restore the door entry monitor to its factory programming.

INTERCOM FUNCTION

Various types of intercom call can be programmed:

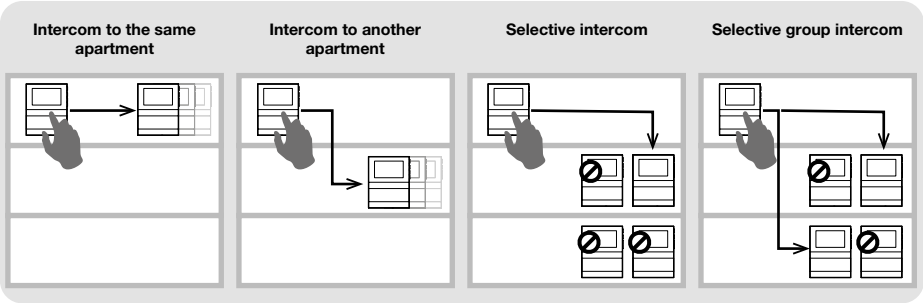

INTERCOM

- **intercom call to the same apartment**
  - ▶ Program the `Intercom to same apartment` function to the chosen button in order to call ALL the door entry monitors in the same apartment.
- **intercom call to another apartment**
  - ▶ Program the `Intercom to other apartment` function to the chosen button in order to call ALL the door entry monitors in that apartment.

SELECTIVE INTERCOM

- **Selective intercom**
  - ▶ This is an intercom call to a single door entry monitor in the same apartment or another apartment identified by a dedicated intercom code, different from the user code. ONLY that door entry monitor will be called. The intercom code can be programmed from 1 to 8. The same intercom code can be associated with up to 3 door entry monitors.

  NOTE: if even a single user programs this function, the intercom code must be programmed on all door entry monitors on the riser, even if they do not use the function!

  1. Program the `Intercom code` on the door entry monitor you want to call.
  2. On the desired button, program the `Selective intercom` function for the `Intercom code` of the door entry monitor you want to call.
- **Selective group intercom**

  This is an intercom call to groups of several door entry monitors in the same apartment or another apartment identified by a dedicated intercom code, different from the user code. The door entry monitor button can be programmed with up to 3 different intercom codes to which the call will be made at once. The maximum number of door entry monitors which can ring simultaneously nevertheless remains 3.

  1. Program the `Intercom code` on the door entry monitors you want to call.
  2. On the desired button, program the `Selective group intercom` function for the intercom codes of the door entry monitors you want to call.

NOTE:
intercom and selective intercom CANNOT be programmed in the same system!

FUNCTIONS ASSOCIATED WITH THE CFP INPUT

In addition to the doorbell, other functions can be associated with the CFP input (CFP and CFP terminals):

- Control of a generic actuator or with a code.
- Panic call (priority call to porter switchboard).
- Remote control of lock-release command.

CALL RANGE

The door entry monitor can be programmed to receive calls originating from the external entrance panel and direct calls, to both your own user code and an interval (range) of user codes.

Example:

If the door entry monitor is programmed with user code “1” and the range of user codes from 5 to 7 is also programmed, when the function is enabled it will receive both direct calls to user code “1” and direct calls to user codes 5, 6 and 7.

√ **The user can only activate/deactivate the range of user codes if they have been authorised to do so by the installer, using the MyComelit app or via the installer menu on the door entry monitor.**

Range activation:

▶ Press and hold buttons and together for 5 seconds.

» *A confirmation tone will play.*

» *The text “CALL RANGE ACTIVATED” appears on the door entry monitor display for 3 seconds.*

» *The LED flashes to indicate that the function is active.*

Range deactivation:

▶ Press and hold buttons and together for 5 seconds.

» *A confirmation tone will play.*

» *The text “CALL RANGE DEACTIVATED” appears on the door entry monitor display for 3 seconds.*

» *The LED switches off.*

Operating distances

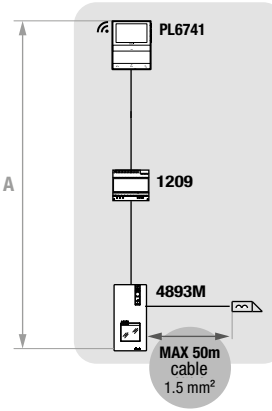

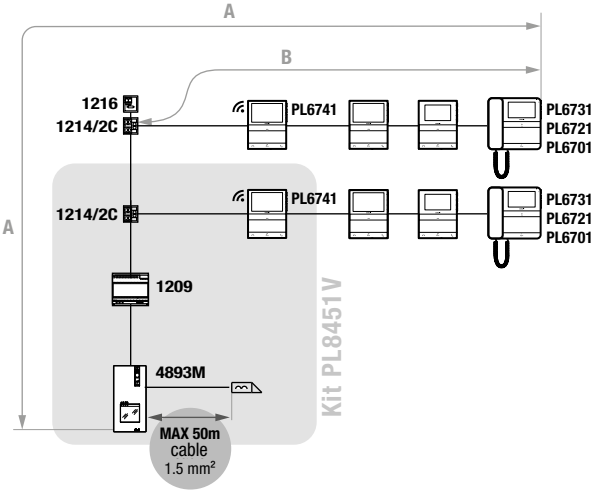

		A MAX	B MAX	art. 1216
Comelit Art. 4577/4579 1 mm² (Ø 1.2 mm AWG 17)		**200 m** (655 feet)	**100 m** (330 feet)	
UTP cat. 5-6-7 0.2 mm² (Ø 0.5 mm AWG 24)		**100 m** (330 feet)	**60 m** (195 feet)	
0.28 mm² (Ø 0.6 mm AWG 23)		**100 m** (330 feet)	**60 m** (195 feet)	
0.5 mm² (Ø 0.8 mm AWG 20)		**100 m** (330 feet)	**60 m** (195 feet)	
1.5 mm² (Ø 1.4 mm AWG 15)		**100 m** (330 feet)	**60 m** (195 feet)	
UTP5 cat. 5 0.2 mm² (Ø 0.5 mm AWG 24) **MULTI PAIR CABLE** ⁜ 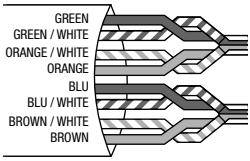 		**200 m** (655 feet)	**70 m** (230 feet)	

⁜ UTP cable with multi-cable connection: OBSERVE THE COLOURS SHOWN IN THE DIAGRAM!

CAUTION! Using shielded cables can reduce distances by 50%

Wiring diagrams

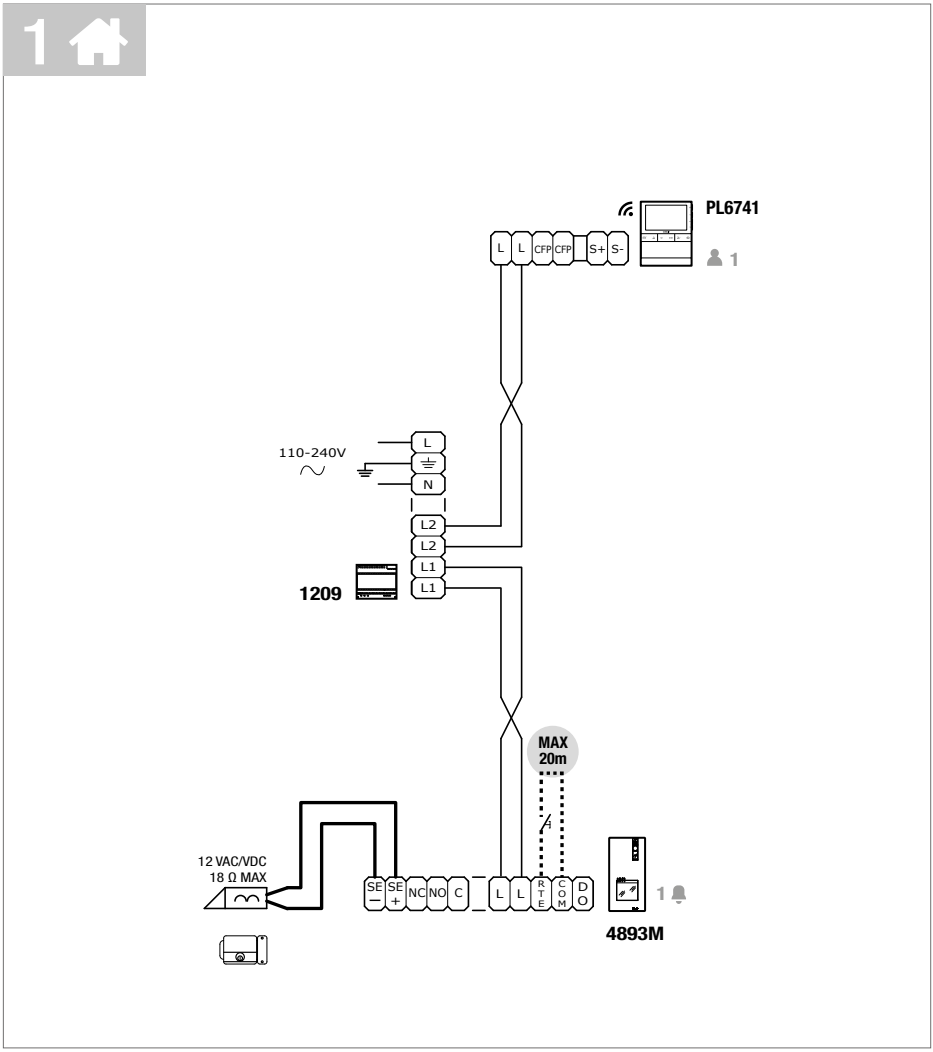

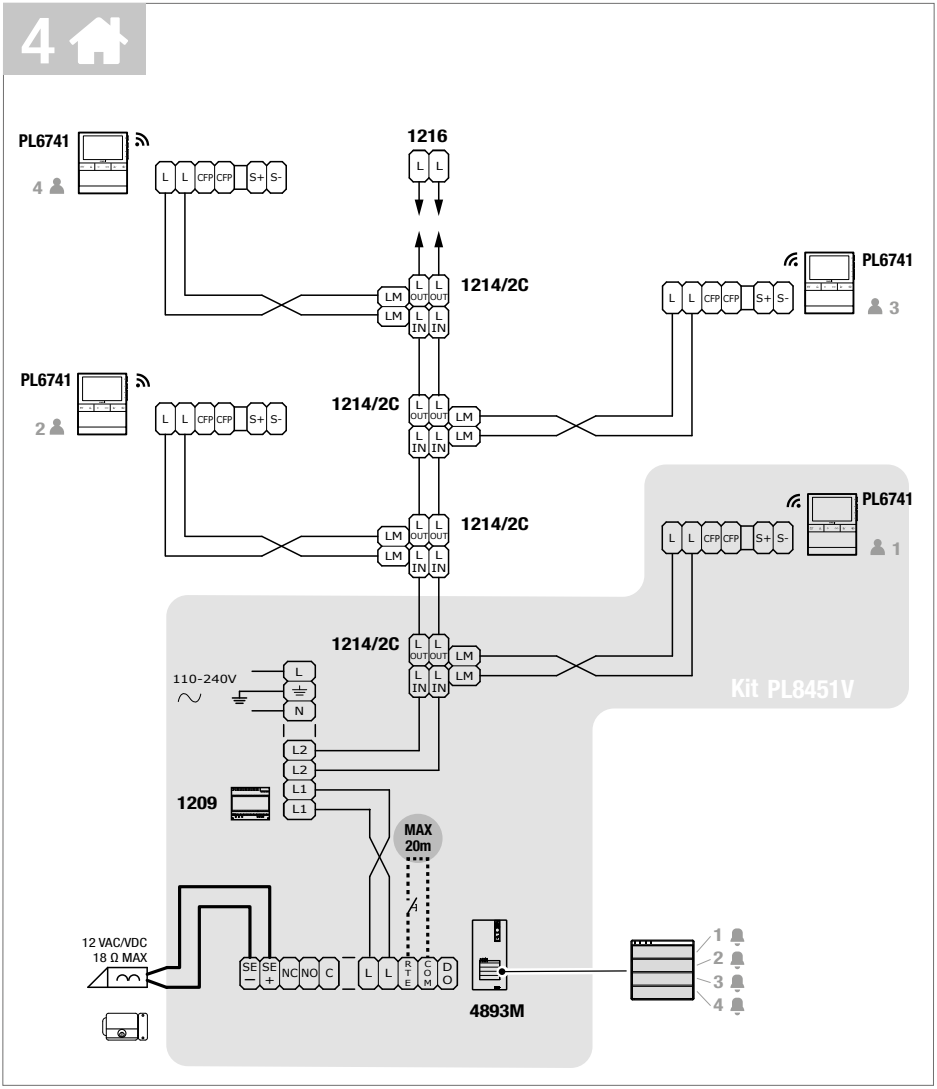
4
PL6741
4
L L CFP CFP S+ S-
1216
L L
1214/2C
LM
L OUT
L IN
PL6741
3
PL6741
2
1214/2C
PL6741
1
1214/2C
Kit PL8451V
110-240V
L
N
L2
L2
L1
L1
1209
MAX
20m
12 VAC/VDC
18 Ω MAX
SE −
SE +
NC NO C
L L
RTE
COM
DO
4893M
1
2
3
4

System expansion diagrams

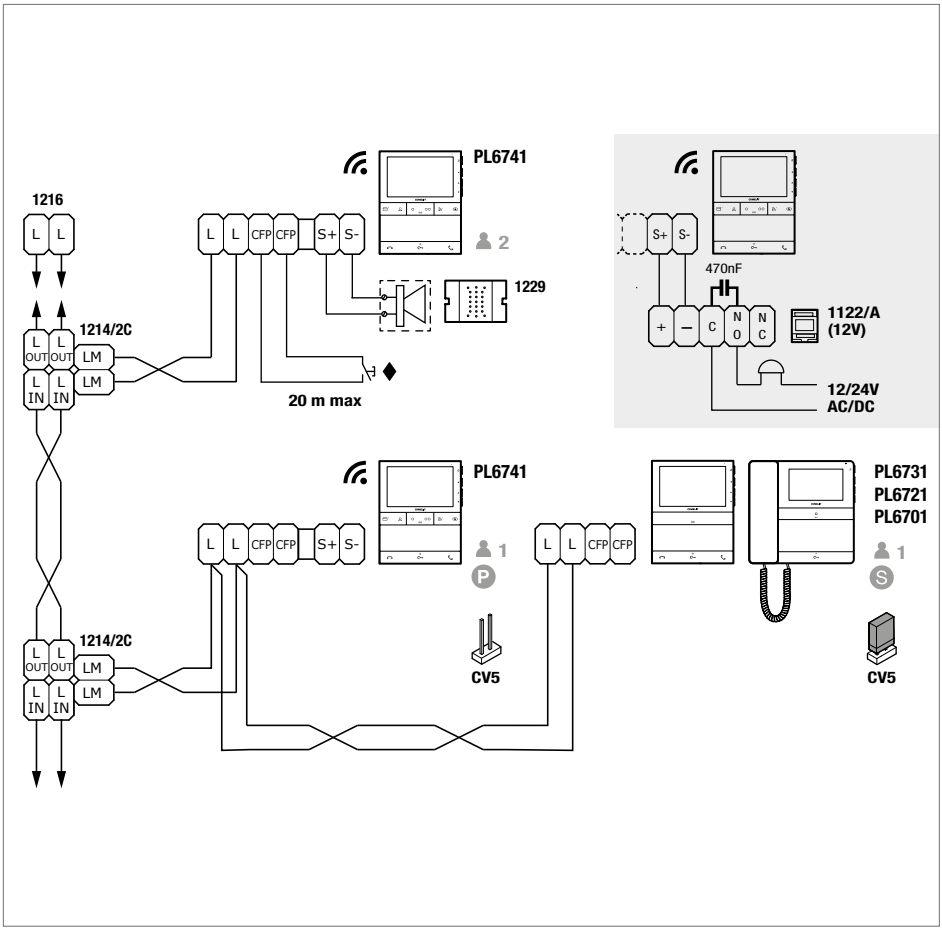

P S The following can be installed for each user code (apartment):

- 1 Wi-Fi door entry monitor art. PL6741, which will be the **only Main door entry monitor** P for the apartment.
- 3 secondary door entry monitors S art. PL6731/PL6721/PL6701.

To programme the door entry monitor as secondary, use the MyComelit app via NFC or the installer menu of the door entry monitor.

◆ **CFP doorbell input.**
Where multiple door-entry phones or door entry monitors have the same user code, connect the CFP button on one only; all the devices will ring simultaneously.

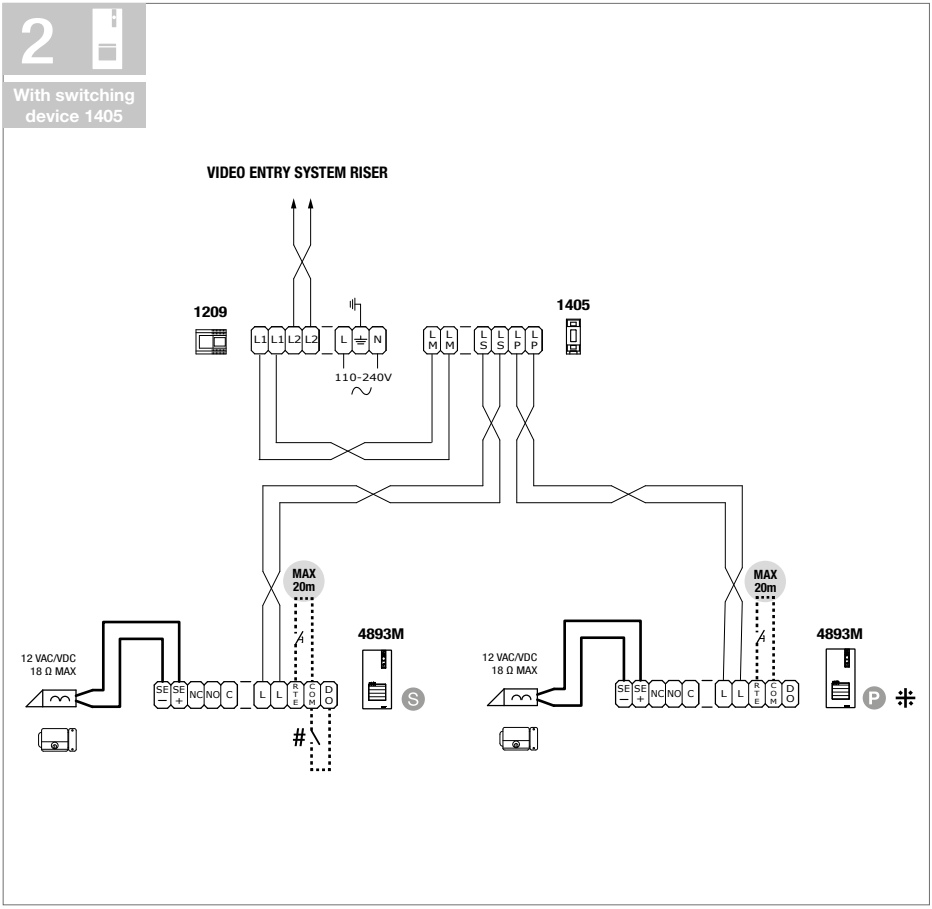

P S To program the entrance panel as **Main** or **Secondary**, refer to Programming an additional entrance panel on page 15.

N.C. contact for door open indication.

⁜ Door open indication not available.

By using the switching device 1405, you can add only one entrance panel to the kit.

The entrance panel does not require an additional power supply unit.

The two entrance panels must be programmed as Main and Secondary.

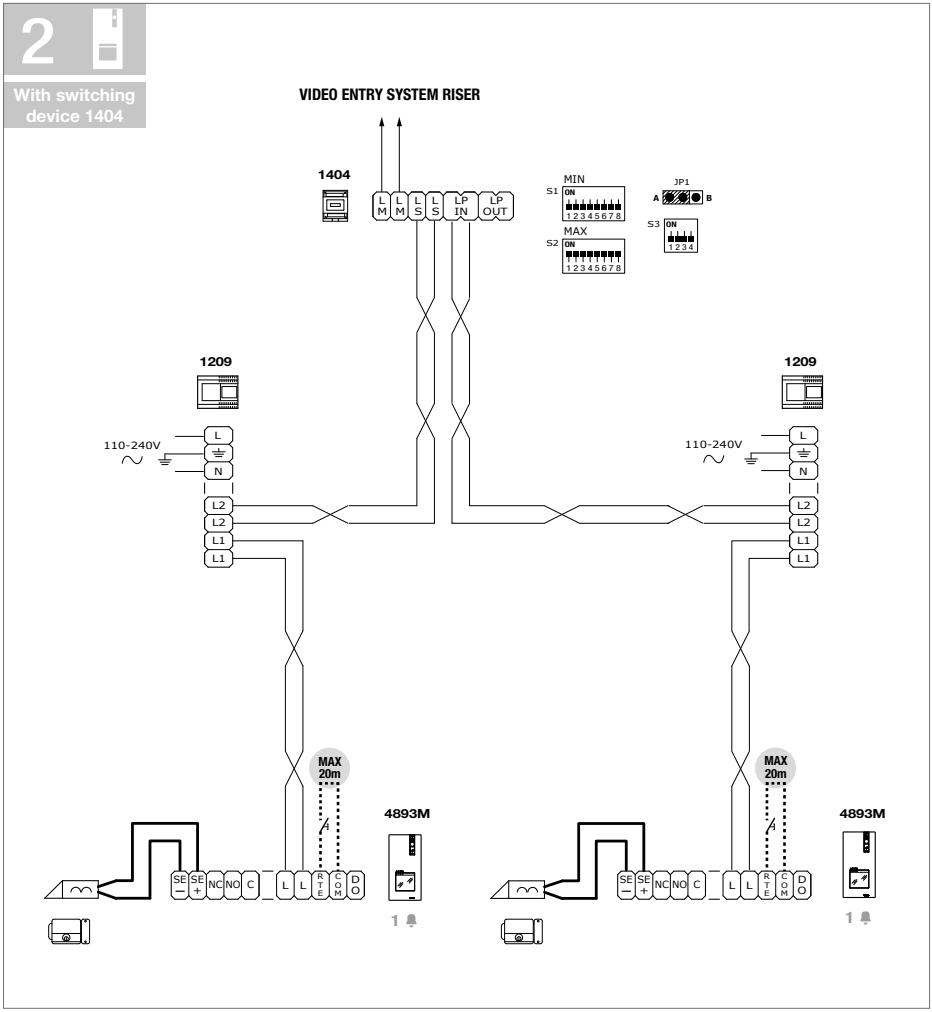

The *Door open indication* function is **not** available.

By using the switching device 1404, you can add one or more entrance panels to the kit.

The entrance panel requires an additional power supply unit.

The entrance panels must not be programmed as Main and Secondary.

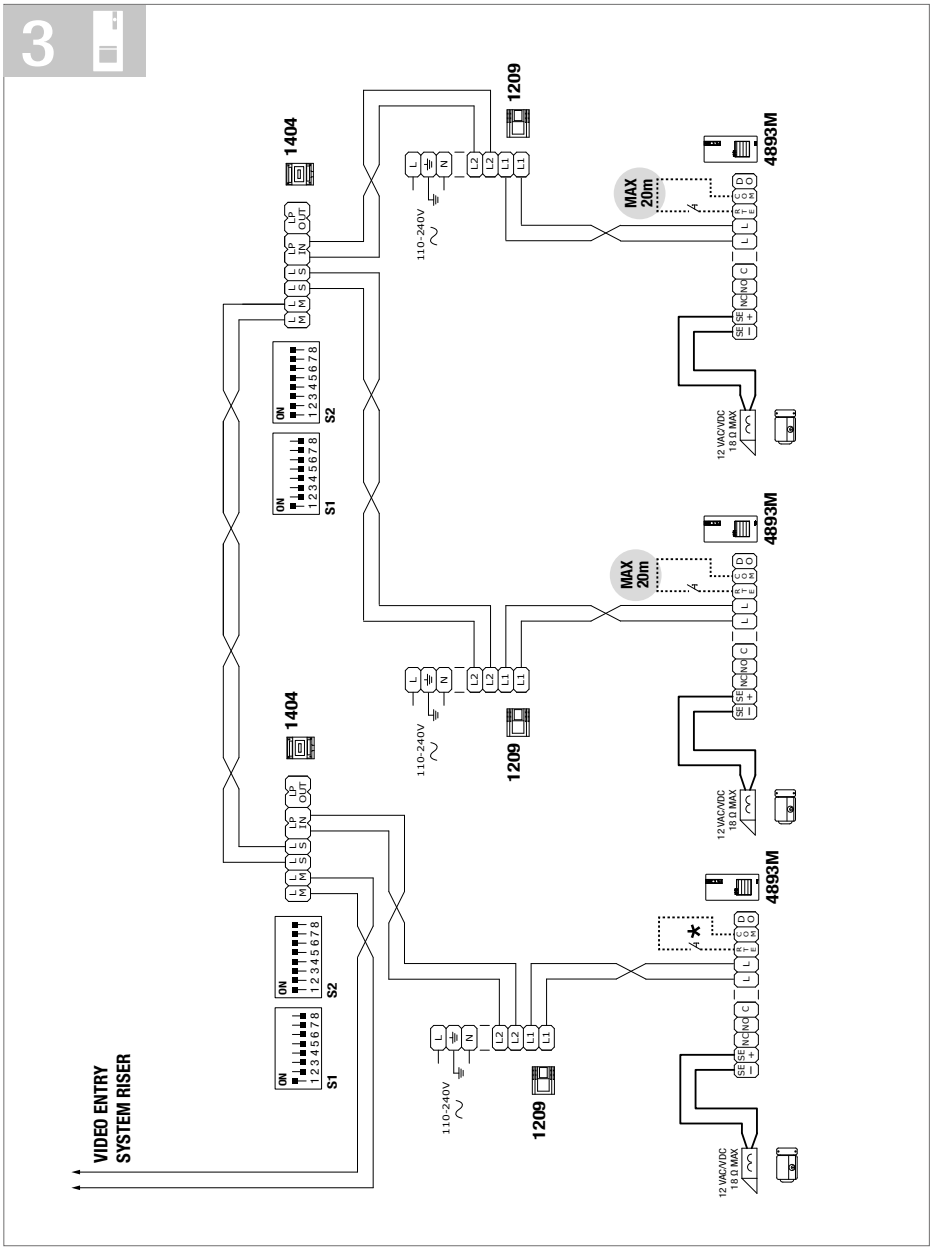

The door open indication function is not available.
The self activation function is available (with toggle function between 2 external units).

Using the entrance panel relay on generic actuator control

Relay activation time C.NC.NO: 2 sec. *(default)*

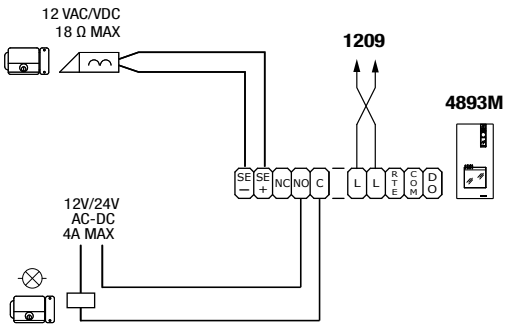

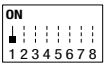

Default

The SE output and the C-NO relay are controlled by 1 single button on the door entry monitor: the key button

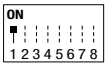

The SE output and the C-NO relay are controlled by 2 separate buttons on the door entry monitor: the key button (SE) and the generic actuator button (C-NO)

Variant with use of safety door lock

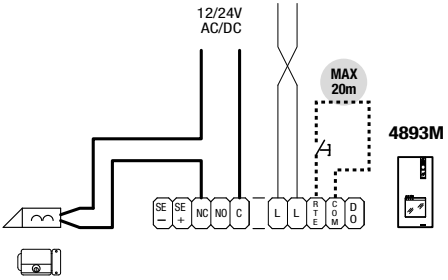

Table of user codes

code	DIP ON																
1	1	**31**	1,2,3,4,5	**61**	1,3,4,5,6	**91**	1,2,4,5,7	**121**	1,4,5,6,7	**151**	1,2,3,5,8	**181**	1,3,5,6,8	**211**	1,2,5,7,8
2	2	**32**	6	**62**	2,3,4,5,6	**92**	3,4,5,7	**122**	2,4,5,6,7	**152**	4,5,8	**182**	2,3,5,6,8	**212**	3,5,7,8
3	1.2	**33**	1.6	**63**	1,2,3,4,5,6	**93**	1,3,4,5,7	**123**	1,2,4,5,6,7	**153**	1,4,5,8	**183**	1,2,3,5,6,8	**213**	1,3,5,7,8
4	3	**34**	2.6	**64**	7	**94**	2,3,4,5,7	**124**	3,4,5,6,7	**154**	2,4,5,8	**184**	4,5,6,8	**214**	2,3,5,7,8
5	1.3	**35**	1,2,6	**65**	1.7	**95**	1,2,3,4,5,7	**125**	1,3,4,5,6,7	**155**	1,2,4,5,8	**185**	1,4,5,6,8	**215**	1,2,3,5,7,8
6	2.3	**36**	3.6	**66**	2.7	**96**	6.7	**126**	2,3,4,5,6,7	**156**	3,4,5,8	**186**	2,4,5,6,8	**216**	4,5,7,8
7	1,2,3	**37**	1,3,6	**67**	1,2,7	**97**	1,6,7	**127**	1,2,3,4,5,6,7	**157**	1,3,4,5,8	**187**	1,2,4,5,6,8	**217**	1,4,5,7,8
8	4	**38**	2,3,6	**68**	3.7	**98**	2,6,7	**128**	8	**158**	2,3,4,5,8	**188**	3,4,5,6,8	**218**	2,4,5,7,8
9	1.4	**39**	1,2,3,6	**69**	1,3,7	**99**	1,2,6,7	**129**	1.8	**159**	1,2,3,4,5,8	**189**	1,3,4,5,6,8	**219**	1,2,4,5,7,8
10	2.4	**40**	4.6	**70**	2,3,7	**100**	3,6,7	**130**	2.8	**160**	6.8	**190**	2,3,4,5,6,8	**220**	3,4,5,7,8
11	1,2,4	**41**	1,4,6	**71**	1,2,3,7	**101**	1,3,6,7	**131**	1,2,8	**161**	1,6,8	**191**	1,2,3,4,5,6,8	**221**	1,3,4,5,7,8
12	3.4	**42**	2,4,6	**72**	4.7	**102**	2,3,6,7	**132**	3.8	**162**	2,6,8	**192**	7.8	**222**	2,3,4,5,7,8
13	1,3,4	**43**	1,2,4,6	**73**	1,4,7	**103**	1,2,3,6,7	**133**	1,3,8	**163**	1,2,6,8	**193**	1,7,8	**223**	1,2,3,4,5,7,8
14	2,3,4	**44**	3,4,6	**74**	2,4,7	**104**	4,6,7	**134**	2,3,8	**164**	3,6,8	**194**	2,7,8	**224**	6,7,8
15	1,2,3,4	**45**	1,3,4,6	**75**	1,2,4,7	**105**	1,4,6,7	**135**	1,2,3,8	**165**	1,3,6,8	**195**	1,2,7,8	**225**	1,6,7,8
16	5	**46**	2,3,4,6	**76**	3,4,7	**106**	2,4,6,7	**136**	4.8	**166**	2,3,6,8	**196**	3,7,8	**226**	2,6,7,8
17	1.5	**47**	1,2,3,4,6	**77**	1,3,4,7	**107**	1,2,4,6,7	**137**	1,4,8	**167**	1,2,3,6,8	**197**	1,3,7,8	**227**	1,2,6,7,8
18	2.5	**48**	5.6	**78**	2,3,4,7	**108**	3,4,6,7	**138**	2,4,8	**168**	4,6,8	**198**	2,3,7,8	**228**	3,6,7,8
19	1,2,5	**49**	1,5,6	**79**	1,2,3,4,7	**109**	1,3,4,6,7	**139**	1,2,4,8	**169**	1,4,6,8	**199**	1,2,3,7,8	**229**	1,3,6,7,8
20	3.5	**50**	2,5,6	**80**	5.7	**110**	2,3,4,6,7	**140**	3,4,8	**170**	2,4,6,8	**200**	4,7,8	**230**	2,3,6,7,8
21	1,3,5	**51**	1,2,5,6	**81**	1,5,7	**111**	1,2,3,4,6,7	**141**	1,3,4,8	**171**	1,2,4,6,8	**201**	1,4,7,8	**231**	1,2,3,6,7,8
22	2,3,5	**52**	3,5,6	**82**	2,5,7	**112**	5,6,7	**142**	2,3,4,8	**172**	3,4,6,8	**202**	2,4,7,8	**232**	4,6,7,8
23	1,2,3,5	**53**	1,3,5,6	**83**	1,2,5,7	**113**	1,5,6,7	**143**	1,2,3,4,8	**173**	1,3,4,6,8	**203**	1,2,4,7,8	**233**	1,4,6,7,8
24	4.5	**54**	2,3,5,6	**84**	3,5,7	**114**	2,5,6,7	**144**	5.8	**174**	2,3,4,6,8	**204**	3,4,7,8	**234**	2,4,6,7,8
25	1,4,5	**55**	1,2,3,5,6	**85**	1,3,5,7	**115**	1,2,5,6,7	**145**	1,5,8	**175**	1,2,3,4,6,8	**205**	1,3,4,7,8	**235**	1,2,4,6,7,8
26	2,4,5	**56**	4,5,6	**86**	2,3,5,7	**116**	3,5,6,7	**146**	2,5,8	**176**	5,6,8	**206**	2,3,4,7,8	**236**	3,4,6,7,8
27	1,2,4,5	**57**	1,4,5,6	**87**	1,2,3,5,7	**117**	1,3,5,6,7	**147**	1,2,5,8	**177**	1,5,6,8	**207**	1,2,3,4,7,8	**237**	1,3,4,6,7,8
28	3,4,5	**58**	2,4,5,6	**88**	4,5,7	**118**	2,3,5,6,7	**148**	3,5,8	**178**	2,5,6,8	**208**	5,7,8	**238**	2,3,4,6,7,8
29	1,3,4,5	**59**	1,2,4,5,6	**89**	1,4,5,7	**119**	1,2,3,5,6,7	**149**	1,3,5,8	**179**	1,2,5,6,8	**209**	1,5,7,8	**239**	1,2,3,4,6,7,8
30	2,3,4,5	**60**	3,4,5,6	**90**	2,4,5,7	**120**	4,5,6,7	**150**	2,3,5,8	**180**	3,5,6,8	**210**	2,5,7,8	**240***	5,6,7,8

* Code 240 is reserved for the porter switchboard.

Warning

Intended use

This Comelit product is designed and manufactured for use in the creation of audio and video communication systems in residential, commercial, industrial and public buildings.

Installation

All activities connected to the installation of Comelit products must be carried out by qualified technical personnel, with careful observation of the indications provided in the Manuals / Instruction sheets supplied with those products. The product must be installed to the highest standards.

Wires

Disconnect the power supply before carrying out any operations on the wiring. Use wires with a cross-section suited to the distances involved, observing the instructions provided in the system manual. We advise against running the system wires through the same duct as power cables (230 V or higher).

Safe usage

To ensure Comelit products are used safely:
- carefully observe the indications provided in the Manuals / Instruction sheets,
- make sure the system created using Comelit products has not been tampered with / damaged.

Maintenance

Comelit products do not require maintenance aside from routine cleaning, which should be carried out in accordance with the indications provided in the Manuals / Instruction sheets.
Any repairs must be carried out:
- for the products themselves, exclusively by **Comelit Group S.p.A.**,
- for the systems, by qualified technical personnel.

Do not use alcohol or aggressive products for cleaning purposes.

Disclaimer

Comelit Group S.p.A. does not assume any responsibility for
- any purpose other than the intended use,
- failure to observe the indications and warnings contained in this Manual / Instruction sheet.

Comelit Group S.p.A. reserves the right to change the information provided in this Manual / Instruction Sheet at any time and without prior notice.

Directives

The manufacturer, **Comelit Group S.p.A.**, hereby declares that this equipment conforms to the applicable directives. The full EU conformity declaration is available on the product web page.

In accordance with art. 26 of Italian Legislative Decree dated 14th March 2014, no. 49 “Implementation of directive 2012/19/EU on Waste Electrical and Electronic Equipment (WEEE)”, the “crossed-out wheelie bin” symbol indicates that at the end of its useful life, this product must be separated from other waste before collection for disposal. The user should therefore take the exhausted appliance to suitable local collection centres for waste electrical and electronic products. As an alternative to handling this process yourself, you can take the appliance to your local equipment dealer when purchasing a new equivalent product. Electronics dealership businesses covering an area of 400 m^2 are also obliged to accept waste electronic products smaller than 25 cm for disposal, without any obligation to purchase. Suitable separated waste collection for the subsequent reuse of the appliance sent for recycling, processing and environmentally conscious disposal helps to avoid potential negative effects on the environment and human health, and encourages the reuse and recycling of the materials used in the construction of the appliance.

CERTIFIED MANAGEMENT SYSTEMS

COMELIT
FEEL · SECURE

www.comelitgroup.com
Via Don Arrigoni, 5 - 24020 Rovetta (BG) - Italy

1st edition 08/2025
code 2G40003317